US
08|2009

Shrink Discs®, Smart-Lock & Shaft Couplings

Partner for performance
www.ringfeder.com

RINGFEDER

A Global Presence For You

The RINGFEDER POWER TRANSMISSION GMBH was founded in 1922 in Krefeld, Germany to fabricate and promote Friction Spring technology. Today we have expanded our offerings to top power transmission and damping products. Innovative thinking sets us apart and allows us to develop progressive and economical solutions to support our customers.

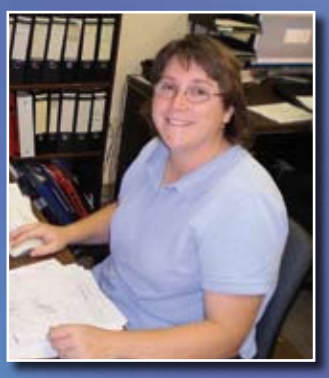

Special applications require special solutions

Our extensive range of RINGFEDER POWER TRANSMISSION products can be applied to solve most applications. We don´t just sell, but by understanding the individual requirements of our customers (e.g. loads on the components, easy installation/removal capability and reduction of production costs) assist you in every step with innovative engineering to plan efficient and technically mature solutions.

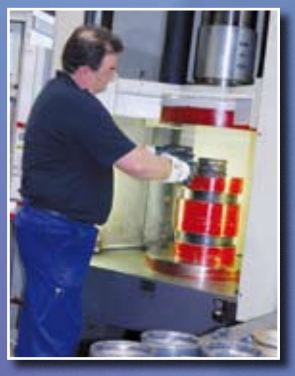

Content

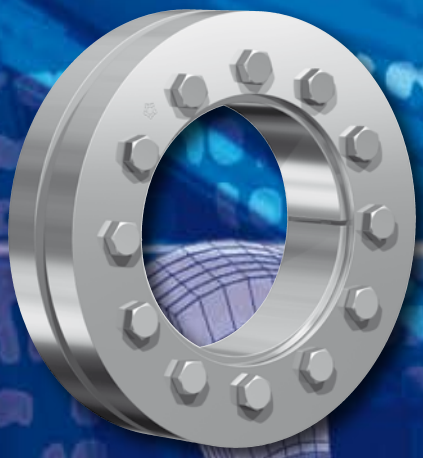

Shrink Discs®

Overview ..... Page 6

Characteristics ..... Page 8

RINGFEDER® RfN 4012 ..... Page 10

RINGFEDER® RfN 4023 ..... Page 12

RINGFEDER® RfN 4051 ..... Page 16

RINGFEDER® RfN 4061 ..... Page 24

RINGFEDER® RfN 4071 ..... Page 32

RINGFEDER® RfN 4073 ..... Page 36

RINGFEDER® RfN 4091 ..... Page 40

RINGFEDER® RfN 4161 ..... Page 48

RINGFEDER® RfN 4171 ..... Page 52

RINGFEDER® RfN 4181 ..... Page 56

RINGFEDER® RfN 4071
Stainless ..... Page 60

All technical details and information is non-binding and cannot be used as a basis for legal claims. The user is obligated to determine whether the represented products meet his requirements. We reserve the right at all times to carry out modifications in the interests of technical progress. Upon the issue of this catalogue all previous brochures and questionnaires on the products displayed are no longer valid.

Smart-Lock

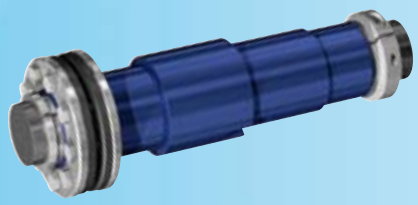

RINGFEDER® RfN 4001 ..... Page 66

Smart-Lock Parts ..... Page 72

Content

Shaft Couplings

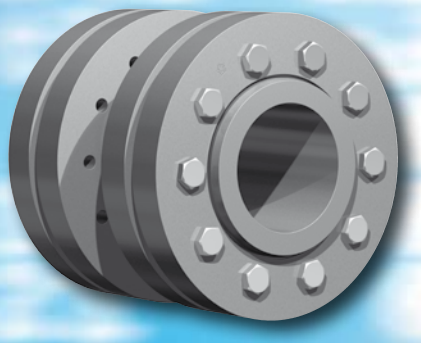

Overview ..... Page 74

Characteristics ..... Page 76

RINGFEDER® WK 5071 ..... Page 78

RINGFEDER® WK 5091 ..... Page 82

Content

Installation and removal instructions

Shrink Discs® ..... Page 86

Shrink Discs®
Stainless ..... Page 90

Content

RINGFEDER® Shrink Discs®

RfN 4012
Light Duty Series

RfN 4023
Light Duty Series

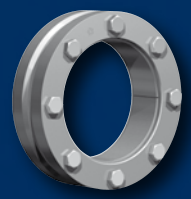

RfN 4051
Light Duty Series

RfN 4051
Light Duty Series, split

RfN 4061
Standard Series

RfN 4061
Standard Series, split

RfN 4071
Standard Series

RfN 4071
Standard Series, split

RfN 4073
Ultra Light Duty Series

RfN 4161
Standard Series

RfN 4171
Standard Series

RfN 4181
Heavy Duty Series

RfN 4091
Heavy Duty Series

RfN 4091
Heavy Duty Series, split

Characteristics

The Shrink Disc® is the modern method for creating a mechanical shrink fit. The Shrink Disc® consists of either one or two thrust rings with tapered bores and a mating tapered inner ring. By tightening locking screws the thrust rings are drawn together compressing the inner ring and applying pressure to the outside of the hub clamping it to the shaft. Being positioned around the hub there is only one interface transmitting the loads giving the Shrink Disc® method distinct advantages such as offering the possibility of very concentric and well balanced connections that are suited to high speed applications. Traditional shrink fits require complicated calculations, close machining tolerances and fine surface finishes. They also need considerable effort with mounting and removal. The Shrink Disc® connection has none of these disadvantages and is better than any of the other usual connection methods with regard to fatigue strength under alternating torsional stress.

Unlimited range of applications – RINGFEDER® Shrink Disc® connections are suitable for securing all types of hubs onto shafts and axles. Replacing traditional shrink fits, keys and polygon connections, splined shafts etc.

Clearances considered for the calculation of the function values:

d_w above INCH	d_w up to INCH	ISO	clearance INCH
0.236	0.394	H6/j6	0.0005
0.394	0.709		0.0007
0.709	1.181		0.0007
1.181	1.969	H6/h6	0.0013
1.969	3.150	H6/g6	0.0019
3.150	4.724	H7/g6	0.0027
4.724	7.087		0.0031
7.087	9.843		0.0035
9.843	12.402		0.0040
12.402	15.748		0.0044
15.748	19.685		0.0048

Any other tolerances can be chosen. As long as the stated max. clearance is not exceeded, there will be no variations of the functional characteristics.

Explanations to tables

d, D, L, l, L_1, L_2, d_1 = Basic dimensions

d_W = solid shaft diameter (provided by the customer)

T = transmissible torque

F_{ax} = transmissible axial force

p = approx. surface pressure on the hub extension (diameter d)

T_A = required tightening torque per screw (Screws greased with molykote or equivalent!)

n = quantity of screws

T_{max} = maximum theoretical transmissible torque

C_w = shaft clearances

C_h = hub tolerances

C_d = shaft tolerances

|1 = Inner ring centering shoulder length

d_2 = clamped component bore

x = clamped component thickness

B = width dimension, relaxed condition

R_1 = hub max. radius (split Shrink Disc®)

s_v = calculated combined stress in the hub extension (d/dw) under consideration of the tangential, radial and torsional stresses following the equation:

$$\sigma_V = \sqrt{{}^1\!/_2\,[(\sigma_X - \sigma_y)^2 + (\sigma_y - \sigma_Z)^2 + (\sigma_Z - \sigma_X)^2] + 3\tau^2}$$

Additional loads, e.g. tension, thrust or bending have to be taken into consideration accordingly.

Function values
The functional characteristics are valid with the screw tightening torque listed in the tables and the following assumed conditions:

The locking screws are lubricated using MoS2 (μ_{tot}= 0.1).
The tapered cones are lubricated using MoS_2 (μ = 0.05).
The contact surfaces (d_w) are in lightly oiled condition with coefficient of friction μ = 0.12.

The hub and shaft materials have a modulus of elasticity of 30 x 10^6 PSI. (Lower values result in increased values for T and Fax with reduced tangential stress.)

The maximum clearance is being fully utilized.
The shaft being used is solid, for hollow shaft applications the functional values will change.

In cases where the assumed conditions do not apply then contact our Technical Department where we will be happy to assist you with your application.

RfN 4012
Light Duty Series

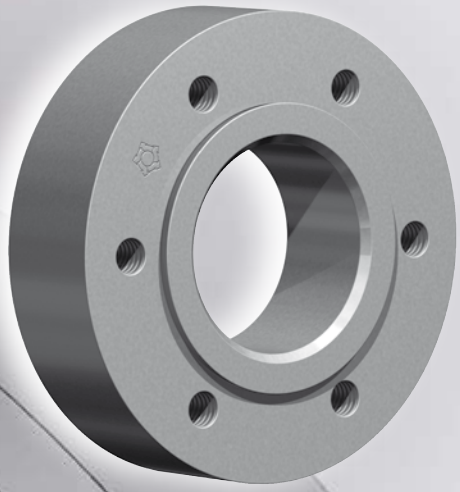

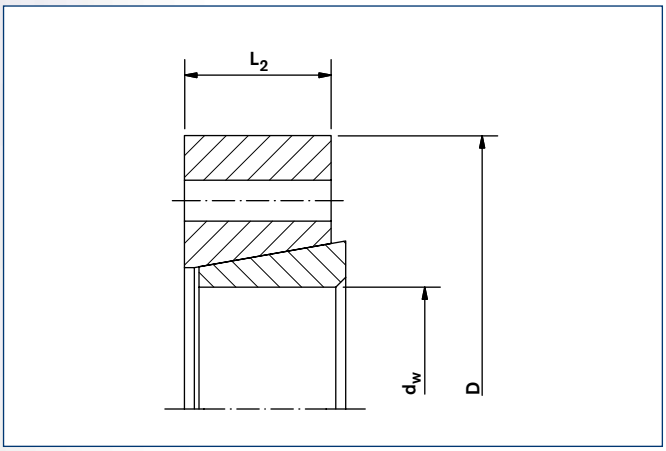

SDA RfN 4012 with tapped holes
SDC RfN 4012 with clearance holes

Characteristics

Reduced dimensions with lower transmission values – especially for applications with restricted space.

Simplified manufacture – only plain shaft and bore diameters with easily achieved surface finish and tolerances are required.

Easy adjustability – No stops, steps, keyways, splines etc. are required, therefore hubs can be located and locked at any point or angle on the shaft.

Easy mounting – RINGFEDER® Shrink Discs® use standard screws and tightened using standard tools. No additional machining or fitting work is required.

Easy removal – after loosening the locking screws, the RINGFEDER® Shrink Disc® will self release and the hub will move freely on the shaft.

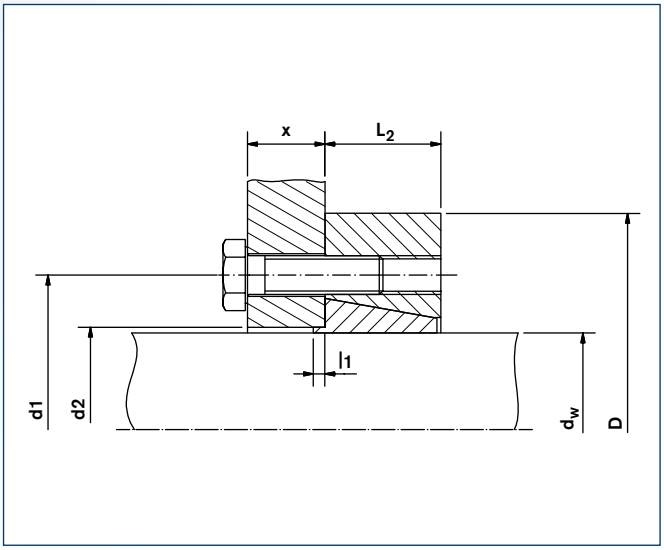

SDB RfN 4012

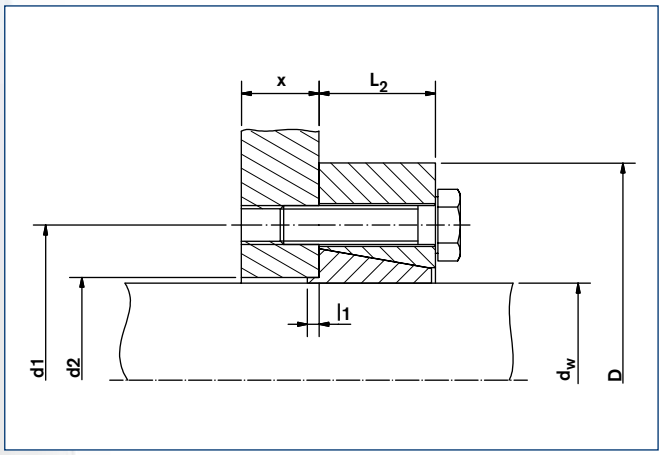

Shrink Disc® RINGFEDER® SDD RfN 4012 · Dimensions

Type	d_w	Cd	D	d_1	d2 h7	Ch	L_2	l1	T_A	Transmissible Torques T	Locking screws* DIN EN ISO 4014-10.9 Quantity	Locking screws* DIN EN ISO 4014-10.9 Thread	Weight WT
	Inch	Inch	Inch	Inch	Inch	Inch	Inch	Inch	lb-ft	lb-ft	n		lbs
10 SD-x	0.354 0.433	+0 -0.0004	1.535	0.984	0.472	+0 -0.0007	0.394	0.059	9	15 15	3	M6	0.2
12 SD-x	0.433 0.512	+0 -0.0006	1.732	1.102	0.551		0.512	0.059	9	37 37	3	M6	0.2
15 SD-x	0.551 0.630		2.047	1.417	0.709		0.591	0.079	22	96 96	3	M8	0.4
20 SD-x	0.630 0.787	+0 -0.0007	2.362	1.654	0.866		0.669	0.079	22	148 148	3	M8	0.7
25 SD-x	0.787 0.984		2.598	1.890	1.063	+0 -0.0008	0.748	0.079	22	251 251	5	M8	0.9
30 SD-x	0.984 1.181		2.992	2.205	1.260		0.827	0.079	22	406 406	6	M8	1.3
40 SD-x	1.181 1.575	+0 -0.0013	3.780	2.756	1.693	+0 -0.0010	0.984	0.118	44	782 782	6	M10	2.6
50 SD-x	1.575 1.969		4.409	3.307	2.087		1.181	0.118	74	1106 1623	7	M12	4.0

Design SDA and SDC without centering · Ordering example: 40 SDA 35 RfN 4012 · * Shrink discs® delivered without screws

RfN 4023

Heavy Duty Series

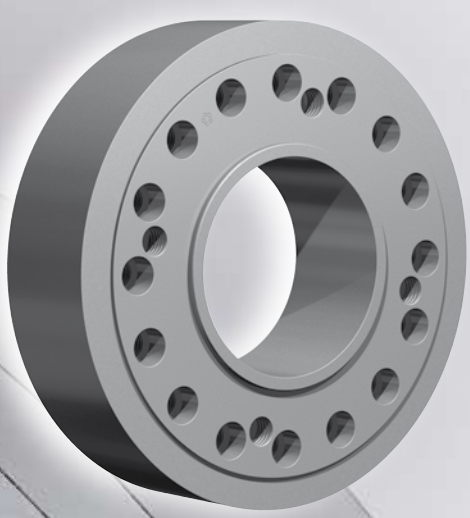

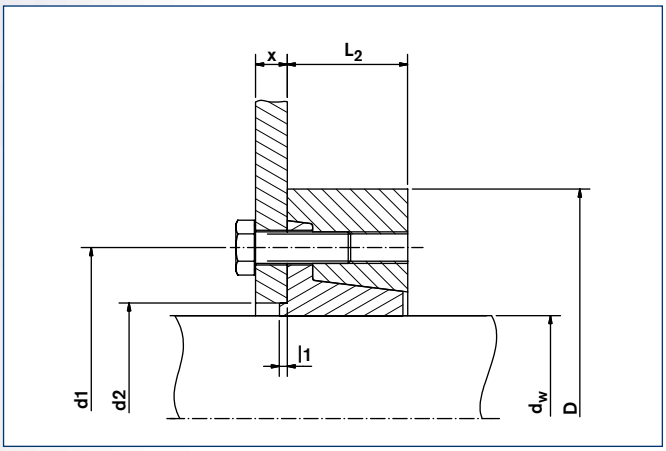

Shrink Disc® RINGFEDER® SDB RfN 4023 · Location

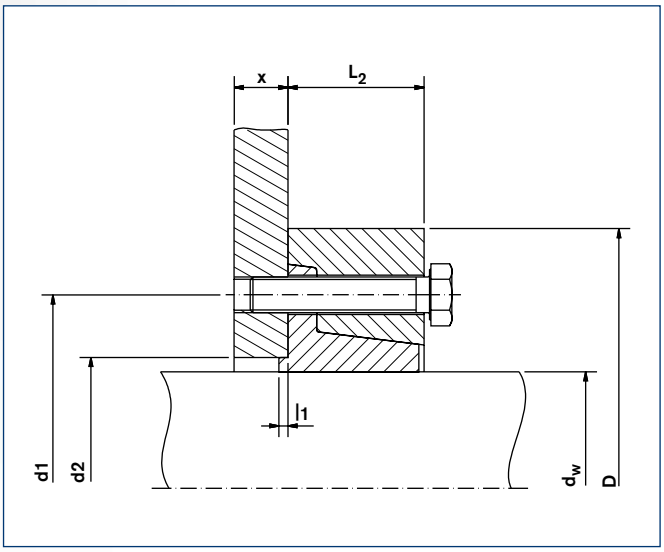

Shrink Disc® RINGFEDER® SDD RfN 4023 · Dimensions

Type	Shrink Disc® Dimensions									Transmissible Torques	Locking screws* DIN EN ISO 4014-10.9		Weight
	d_w	Cd	D	d_1	d2	Ch	L_2	|1	T_A	T	Quantity	Thread	WT
	Inch	Inch	Inch	Inch	Inch	Inch	Inch	Inch	lb-ft	lb-ft	n		lbs
50 SD-x	1.575 1.969	+0 -0.0011	4.528	3.307	2.087	+0 -0.0010	1.181	0.118	74	1033 2434	7	M12	4.4
60 SD-x	1.969 2.362		4.724	3.700	2.480	+0 -0.0012	1.339	0.118	74	1696 3466	9	M12	4.8
70 SD-x	2.362 2.756		5.827	4.409	2.913		1.575	0.157	184	4278 6933	8	M16	10
80 SD-x	2.756 3.150		6.693	5.118	3.307		1.732	0.157	184	5900 8850	9	M16	13
90 SD-x	3.150 3.543	+0 -0.0013	7.283	5.669	3.701	+0 -0.0014	1.969	0.157	184	8850 13275	12	M16	18
100 SD-x	3.543 3.937		7.756	6.142	4.094		2.126	0.157	184	11800 16963	14	M16	21
110 SD-x	3.937 4.331		8.465	6.535	4.567		2.283	0.197	362	16225 19913	10	M20	27
120 SD-x	4.331 4.724		9.055	7.323	4.961		2.559	0.197	362	24338 31713	14	M20	75
140 SD-x	4.724 5.512	+0 -0.0015	11.417	8.504	5.748	+0 -0.0016	2.992	0.197	362	28763 41300	16	M20	145
160 SD-x	5.512 6.299		12.598	9.213	6.535		3.268	0.197	627	47200 56788	14	M24	189
180 SD-x	6.299 7.087		13.386	10.870	7.323		3.701	0.197	627	62688 76700	16	M24	105
200 SD-x	7.087 7.874	+0 -0.0017	14.567	11.420	8.110	+0 -0.0018	3.780	0.197	922	84075 106200	16	M27	125

Design SDA and SDC without centering · Ordering example: 40 SDA 35 RfN 4023 · * Shrink discs® delivered without screws

To continue see next page

RfN 4023
Heavy Duty Series

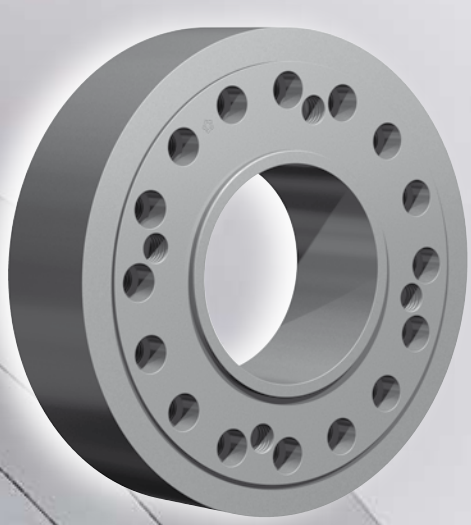

Characteristics

Reduced dimensions with lower transmission values – especially for applications with restricted space.

Simplified manufacture – only plain shaft and bore diameters with easily achieved surface finish and tolerances are required.

Easy adjustability – No stops, steps, keyways, splines etc. are required, therefore hubs can be located and locked at any point or angle on the shaft.

Easy mounting – RINGFEDER® Shrink Discs® use standard screws and tightened using standard tools. No additional machining or fitting work is required.

Easy removal – after loosening the locking screws, the RINGFEDER® Shrink Disc® will self release and the hub will move freely on the shaft.

Low susceptibility to contamination – when the locking screws are tightened the contact (functional) surfaces are pressed firmly together and prevent contamination by dirt and moisture.

Highest reliability – due to the materials chosen and manufacturing processes used, RINGFEDER® Shrink Discs® can be tightened and released as often as required. If locking screws need replacing, they are standard items and thus easily available.

Type	Shrink Disc® Dimensions									Transmissible Torques	Locking screws* DIN EN ISO 4014-10.9		Weight
	d_w	Cd	D	d_1	d2	Ch	L_2	|1	T_A	T	Quantity	Thread	WT
	Inch	Inch	Inch	Inch	Inch	Inch	Inch	Inch	lb-ft	lb-ft	n		lbs
220 SD-x	7.874 8.661	+0 -0.0035	15.945	12.598	8.898	+0 -0.0018	3.937	0.197	922	117263 131275	18	M27	156
240 SD-x	8.661 9.449		16.929	13.386	9.685		4.331	0.197	922	155613 155613	20	M27	189
260 SD-x	9.449 10.236	+0 -0.0040	18.110	14.016	11.260	+0 -0.0020	4.882	0.197	922	172575 171100	21	M27	241
280 SD-x	10.236 11.024		19.094	14.173	12.05		5.118	0.197	922	172575 172575	21	M27	275
300 SD-x	11.024 11.811		20.472	14.961	12.99		5.118	0.197	922	182163 182163	21	M27	317
320 SD-x	11.811 12.598		21.654	15.827	13.780	+0 -0.0022	5.354	0.315	922	220513 220513	24	M27	367
340 SD-x	12.598 13.386	+0 -0.0044	22.441	16.693	14.57		5.630	0.315	922	232313 232313	24	M27	403
360 SD-x	13.386 14.173		24.016	17.874	15.75		5.787	0.315	1254	302375 302375	24	M30	480
390 SD-x	14.173 15.354		24.803	19.134	16.93		6.575	0.315	1254	323763 323763	24	M30	550
420 SD-x	15.354 16.535	+0 -0.0048	26.378	19.921	17.72	+0 -0.0025	6.890	0.394	1254	337038 337038	24	M30	642
440 SD-x	15.748 17.323		27.559	21.024	18.5		6.890	0.394	1254	414475 414475	28	M30	700

Design SDA and SDC without centering · Ordering example: 40 SDA 35 RfN 4023 · * Shrink discs® delivered without screws

More sizes on request

RfN 4051
Light Duty Series

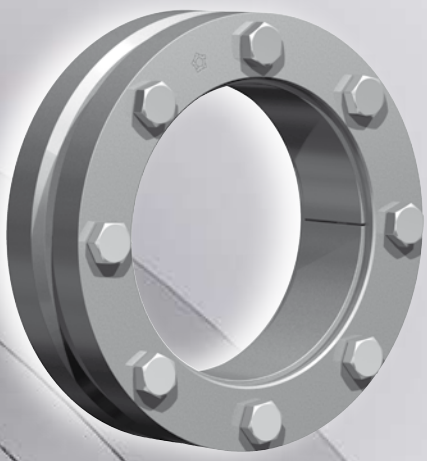

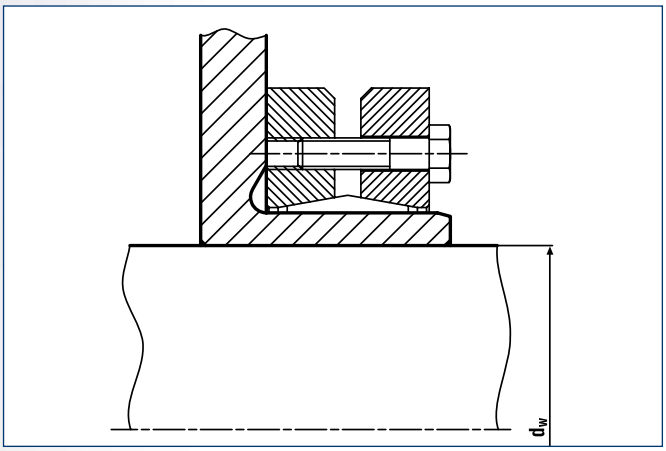

Shrink Disc® RINGFEDER® RfN 4051 · Location

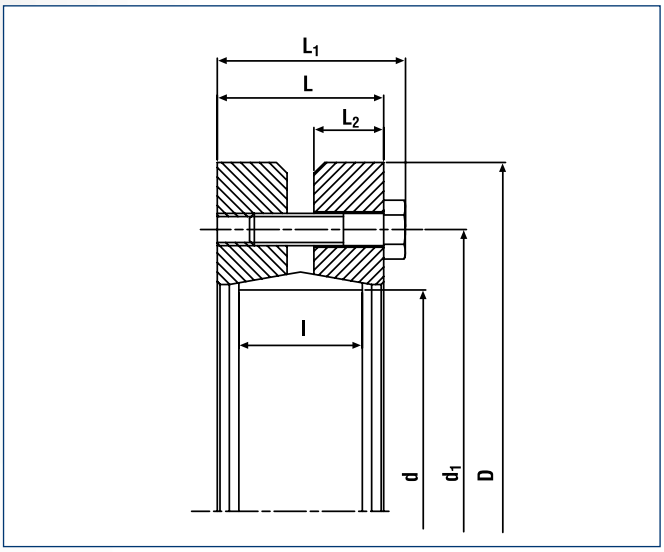

Shrink Disc® RINGFEDER® RfN 4051 · Dimensions

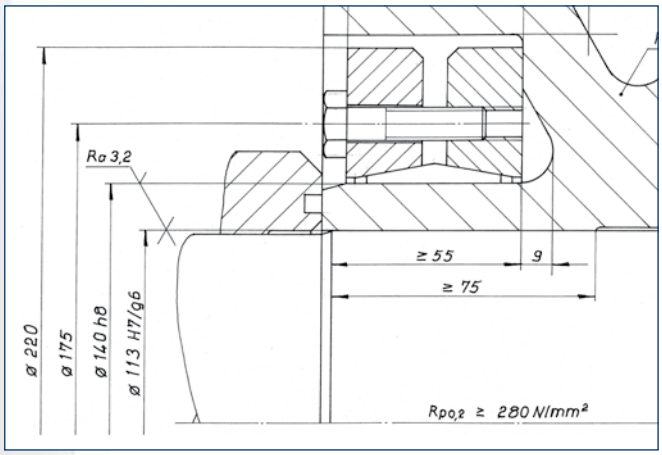

Thrust bearing locking collar (metric example)

Size	Shrink Disc® dimensions											Transmissible torques or axial forces				Locking screws DIN EN ISO 4014-10.9		Weight	
	d_w	Cw	d	Ch	D	L_1	L	d_1	L_2	l	T_A	T	F_{ax}	P	σ_v	Quantity	Thread	WT	T_{max}
	Inch	Inch	Inch	Inch	Inch	Inch	Inch	Inch	Inch	Inch	lb-ft	lb-ft	lbs	psi	psi	n		lbs	lb-ft
125	3.740 4.134	0.0027	4.921	+0 -0.0025	7.283	2.283	2.008	6.220	0.866	1.535	44	7781 10178	49456 58448	27695	40310 41760	8	M10x40	13	9736 12723
140	4.331 4.921		5.512		8.661	2.283	2.008	6.890	0.866	1.535	44	10916 15120	59572 73060	27840	38860 45675	9	M10x40	18	13645 18900
155	5.118 5.512	0.0031	6.102		9.646	2.283	2.008	7.559	0.866	1.535	44	17701 21389	82052 92168	30740	42485 48430	11	M10x40	22	22127 26737
165	5.315 5.709		6.496		10.236	2.756	2.441	8.268	1.024	1.811	74	23602 28396	106780 119144	32480	43210 47415	10	M12x50	31	29502 35495
175	5.709 6.102		6.890		10.827	2.756	2.441	8.661	1.024	1.811	74	28765 33928	120268 132632	33640	43790 48430	11	M12x50	35	35956 42410
185	6.102 6.496		7.283	+0 -0.0028	11.614	2.756	2.441	8.858	1.024	1.811	74	34370 39828	134880 146120	34800	44515 49445	12	M12x50	44	42963 49785
195	6.496 6.890		7.677		12.402	3.150	2.835	9.331	1.220	2.205	74	46466 53473	170848 185460	33785	44370 51475	15	M12x55	60	58083 66841
200	6.890 7.283		7.874		12.992	3.150	2.835	9.528	1.220	2.205	74	54579 62324	191080 205692	35235	48430 63800	16	M12x55	66	68316 77905
220	7.087 7.874	0.0035	8.661		13.583	3.701	3.307	10.433	1.417	2.598	184	61070 77444	206816 237164	31900	40165 53215	10	M16x65	77	76337 96805
240	7.874 8.465		9.449		14.567	3.701	3.307	11.417	1.417	2.598	184	83344 99202	255148 281000	35235	44080 51620	12	M16x65	97	104180 124002
260	8.661 9.252		10.236		15.551	4.016	3.622	12.205	1.575	2.835	184	109896 127598	303480 331580	34800	43935 52780	14	M16x70	106	137371 159497
280	9.055 9.843		11.024	+0 -0.0032	16.732	4.488	4.094	13.110	1.811	3.307	184	126123 153412	333828 373168	31610	39150 46980	16	M16x75	132	157653 191766
300	9.843 10.630	0.0040	11.811		18.110	4.488	4.094	14.094	1.811	3.307	184	158575 188078	386656 424872	33205	40455 49590	18	M16x75	165	198219 235097
320	10.630 11.417		12.598		19.488	4.567	4.173	14.882	1.890	3.307	184	191766 225693	436112 477700	34655	42485 51475	20	M16x75	185	239707 282117
340	11.417 12.008		13.386		21.063	4.567	4.173	15.827	1.890	3.307	184	221268 248558	465336 496808	34220	41760 47270	21	M16x75	221	276585 310697
350	11.811 12.205		13.780	+0 -0.0035	21.457	5.315	4.803	16.260	2.126	3.937	361	274372 295024	558628 582232	33350	42340 46400	16	M20x90	265	342965 368780
360	11.811 12.598		14.173		21.850	5.315	4.803	16.654	2.126	3.937	361	265522 306087	539520 582232	32335	39150 45530	16	M20x90	276	331902 382609
380	12.598 12.992	0.0044	14.961		23.031	5.866	5.354	17.402	2.362	4.409	361	320839 344441	611456 637308	30885	38860 41325	18	M20x100	331	401048 430551
390	12.992 13.780		15.354		23.425	5.866	5.354	17.795	2.362	4.409	361	372468 425572	687888 740716	33350	41325 48865	20	M20x100	344	465585 531965

To continue see next page

Characteristics

Reduced dimensions with lower transmission values – especially for applications with restricted space.

Simplified manufacture – only plain shaft and bore diameters with easily achieved surface finish and tolerances are required.

Easy adjustability – No stops, steps, keyways, splines etc. are required, therefore hubs can be located and locked at any point or angle on the shaft.

Easy mounting – RINGFEDER® Shrink Discs® use standard screws and tightened using standard tools. No additional machining or fitting work is required.

Easy removal – after loosening the locking screws, the RINGFEDER® Shrink Disc® will self release and the hub will move freely on the shaft.

Low susceptibility to contamination – when the locking screws are tightened the contact (functional) surfaces are pressed firmly together and prevent contamination by dirt and moisture.

Highest reliability – due to the materials chosen and manufacturing processes used, RINGFEDER® Shrink Discs® can be tightened and released as often as required. If locking screws need replacing, they are standard items and thus easily available.

Size	Shrink Disc® dimensions											Transmissible torques or axial forces				Locking screws DIN EN ISO 4014-10.9		Weight	
	d_w	Cw	d	Ch	D	L_1	L	d_1	L_2	l	T_A	T	F_{ax}	P	σ_v	Quantity	Thread	WT	T_{max}
	Inch	Inch	Inch	Inch	Inch	Inch	Inch	Inch	Inch	Inch	lb-ft	lb-ft	lbs	psi	psi	n		lbs	lb-ft
400	13.386 14.173	0.0044	15.748	+0 -0.0035	24.213	5.866	5.354	18.189	2.362	4.409	361	405658 461713	727228 782304	34220	42195 50025	21	M20x100	375	507073 577141
420	13.780 14.567		16.535	+0 -0.0038	24.803	6.181	5.669	19.094	2.520	4.724	361	426310 483102	741840 796916	31755	38425 43065	22	M20x100	408	532887 603877
440	14.567 15.354		17.323		25.984	6.181	5.669	19.882	2.520	4.724	361	499328 562021	822768 878968	33205	39730 44805	24	M20x100	452	624160 702526
460	15.354 16.142		18.110		26.969	6.732	6.220	20.748	2.795	5.197	361	619550 689619	971136 1029584	33640	41035 47560	28	M20x110	518	774438 862945
480	16.142 16.732	0.0048	18.898		28.150	6.732	6.220	21.535	2.795	5.197	361	657166 712483	977880 1022390,4	32190	39875 43645	28	M20x110	562	821457 890604
500	16.732 17.323		19.685		29.528	6.732	6.220	22.323	2.795	5.197	361	727234 786239	1044196 1089156	33060	39875 43065	30	M20x110	628	909043 982799

More sizes on request

RfN 4051
split

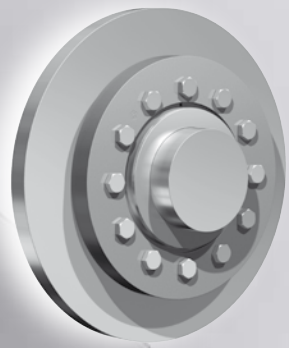

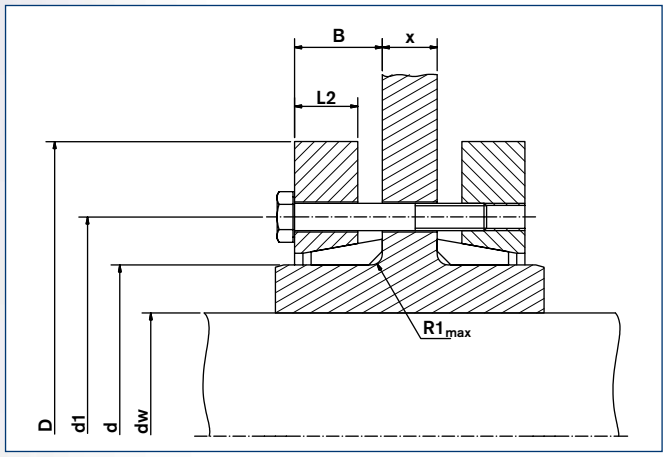

Shrink Disc® RINGFEDER® RfN 4051 split · Location

Split Shrink Discs®

In the application shown above special screws according to the dimension X are required, which have to be ordered accordingly. If the dimension X is above 2 x L (L taken from the Standard and the Light Duty Series) or above 1 x L (taken from the Heavy Duty Series) the transmissible torque may be reduced by up to 50%.

Half Shrink Discs®

With half shrink discs® HC/HT only 50% of stated T is transmitted.

type H**T** (**T**hreaded holes in thrust ring)

type H**C** (**C**learance holes in thrust ring)

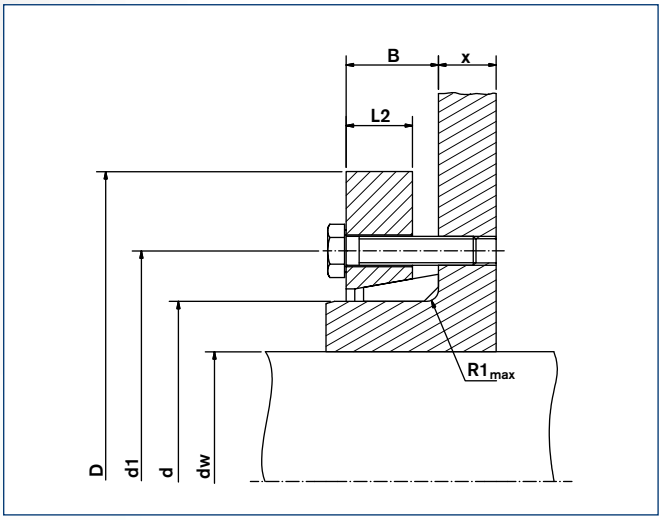

Shrink Disc® RINGFEDER® RfN 4051 HC · Dimensions

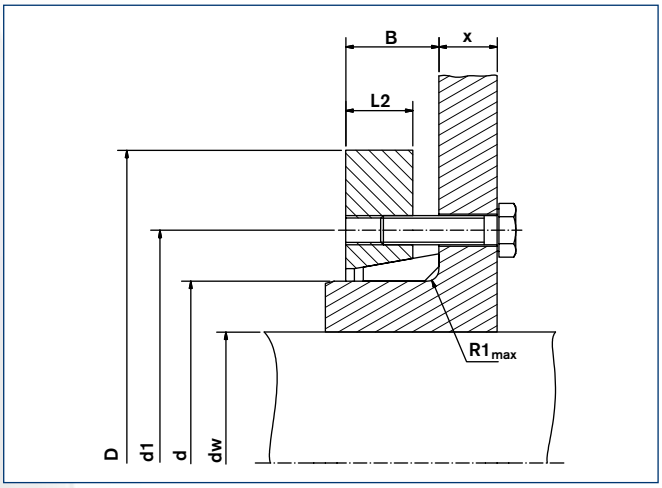

Shrink Disc® RINGFEDER® RfN 4051 HT · Dimensions

Size	Shrink Disc® dimensions									Transmissible torques or axial forces		Locking screws DIN EN ISO 4014-10.9		Weight
	d_w	Cw	d	Ch	D	d_1	B±0.039	R1 max	T_A	T	F_{ax}	Quantity	Thread	WT
	Inch	Inch	Inch	Inch	Inch	Inch	Inch	Inch	lb-ft	lb-ft	lbs	n		lbs
125	3.740 4.134	0.0027	4.921	+0 -0.0025	7.283	6.220	1.201	0.189	44	7781 10178	49456 58448	8	M10	13
140	4.331 4.921		5.512		8.661	6.890	1.215	0.189	44	10916 15120	59572 73060	9	M10	18
155	5.118 5.512	0.0031	6.102		9.646	7.559	1.201	0.189	44	17701 21389	82052 92168	11	M10	22
165	5.315 5.709		6.496		10.236	8.268	1.417	0.189	74	23602 28396	106780 119144	10	M12	31
175	5.709 6.102		6.890		10.827	8.661	1.417	0.189	74	28765 33928	120268 132632	11	M12	35
185	6.102 6.496		7.283	+0 -0.0028	11.614	8.858	1.417	0.189	74	34370 39828	134880 146120	12	M12	44
195	6.496 6.890		7.677		12.402	9.331	1.614	0.189	74	46466 53473	170848 185460	15	M12	60
200	6.890 7.283		7.874		12.992	9.528	1.614	0.189	74	54579 62324	191080 205692	16	M12	66
220	7.087 7.874	0.0035	8.661		13.583	10.433	1.850	0.189	184	61070 77444	206816 237164	10	M16	77
240	7.874 8.465		9.449		14.567	11.417	1.850	0.189	184	83344 99202	255148 281000	12	M16	97
260	8.661 9.252		10.236	+0 -0.0032	15.551	12.205	2.067	0.252	184	109896 127598	303480 331580	14	M16	106
280	9.055 9.843		11.024		16.732	13.110	2.343	0.252	184	126123 153412	333828 373168	16	M16	132
300	9.843 10.630	0.0040	11.811		18.110	14.094	2.343	0.252	184	158575 188078	386656 424872	18	M16	165
320	10.630 11.417		12.598	+0 -0.0035	19.488	14.882	2.382	0.252	184	191766 225693	436112 477700	20	M16	185
340	11.417 12.008		13.386		21.063	15.827	2.382	0.252	184	221268 248558	465336 496808	21	M16	221
350	11.811 12.205		13.780		21.457	16.260	2.697	0.252	361	274372 295024	558628 582232	16	M20	265
360	11.811 12.598		14.173		21.850	16.654	2.697	0.252	361	265522 306087	539520 582232	16	M20	276
380	12.598 12.992	0.0044	14.961		23.031	17.402	2.972	0.252	361	320839 344441	611456 637308	18	M20	331
390	12.992 13.780		15.354		23.425	17.795	3.071	0.331	361	372468 425572	687888 740716	20	M20	344
400	13.386 14.173		15.748		24.213	18.189	3.071	0.331	361	405658 461713	727228 782304	21	M20	375
420	13.780 14.567		16.535	+0 -0.0038	24.803	19.094	3.228	0.331	361	426310 483102	741840 796916	22	M20	408

To continue see next page

RfN 4051
split

Characteristics

Reduced dimensions with lower transmission values – especially for applications with restricted space.

Simplified manufacture – only plain shaft and bore diameters with easily achieved surface finish and tolerances are required.

Easy adjustability – No stops, steps, keyways, splines etc. are required, therefore hubs can be located and locked at any point or angle on the shaft.

Easy mounting – RINGFEDER® Shrink Discs® use standard screws and tightened using standard tools. No additional machining or fitting work is required.

Easy removal – after loosening the locking screws, the RINGFEDER® Shrink Disc® will self release and the hub will move freely on the shaft.

Low susceptibility to contamination – when the locking screws are tightened the contact (functional) surfaces are pressed firmly together and prevent contamination by dirt and moisture.

Highest reliability – due to the materials chosen and manufacturing processes used, RINGFEDER® Shrink Discs® can be tightened and released as often as required. If locking screws need replacing, they are standard items and thus easily available.

Size	Shrink Disc® dimensions									Transmissible torques or axial forces		Locking screws DIN EN ISO 4014-10.9		Weight
	d_w	Cw	d	Ch	D	d_1	B±0.039	R1 max	T_A	T	F_{ax}	Quantity	Thread	WT
	Inch	Inch	Inch	Inch	Inch	Inch	Inch	Inch	lb-ft	lb-ft	lbs	n		lbs
440	14.567 15.354	0.0044	17.323	+0 -0.0038	25.984	19.882	3.228	0.331	361	499328 562021	822768 878968	24	M20	452
460	15.354 16.142		18.110		26.969	20.748	3.602	0.390	361	619550 689619	971136 1029584	28	M20	518
480	16.142 16.732	0.0048	18.898		28.150	21.535	3.602	0.390	361	657166 712483	977880 1022390	28	M20	562
500	16.732 17.323		19.685		29.528	22.323	3.602	0.390	361	727234 786239	1044196 1089156	30	M20	628

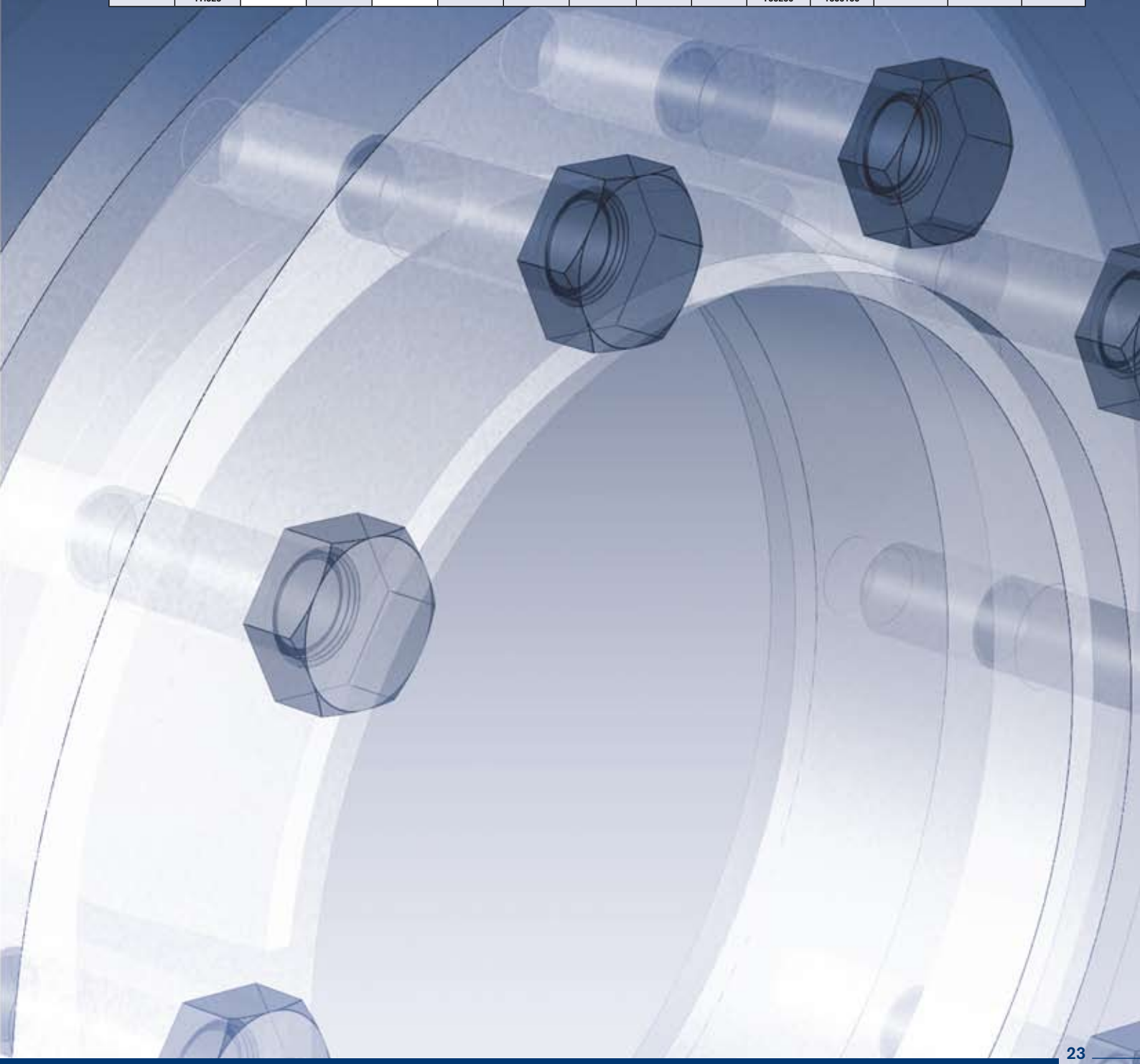

RfN 4061
Standard Series

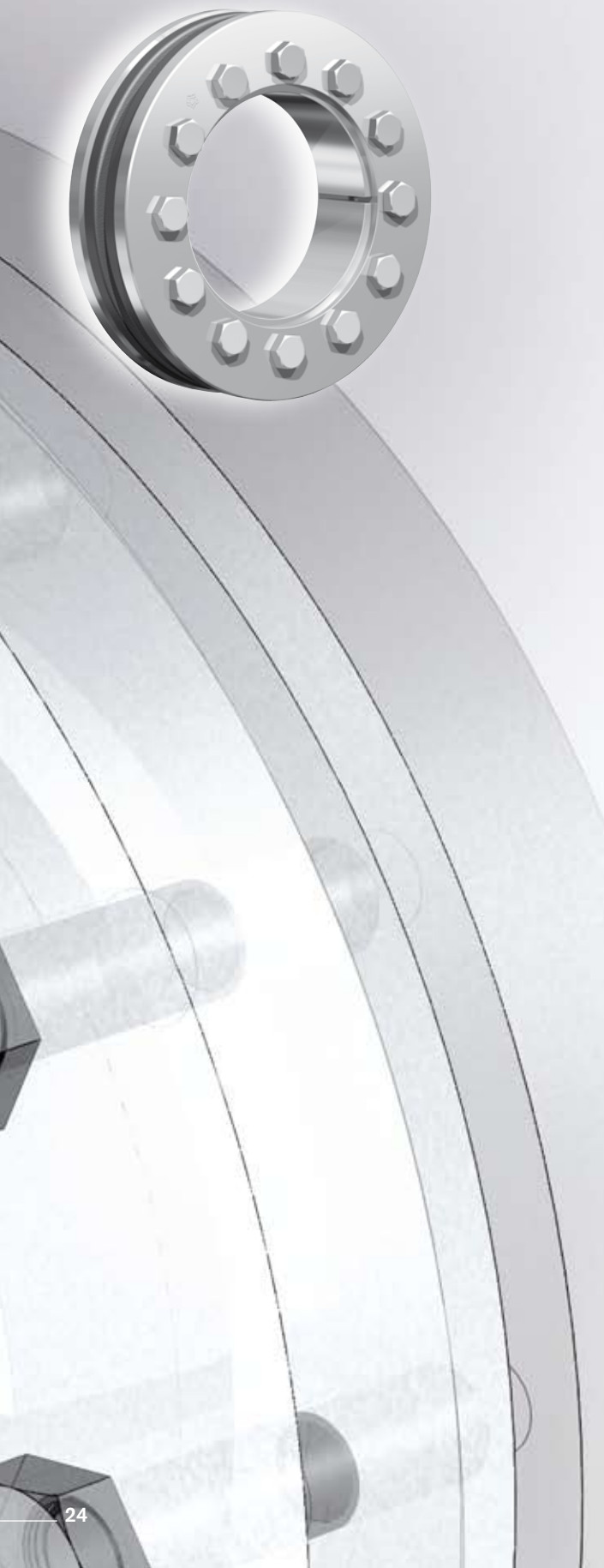

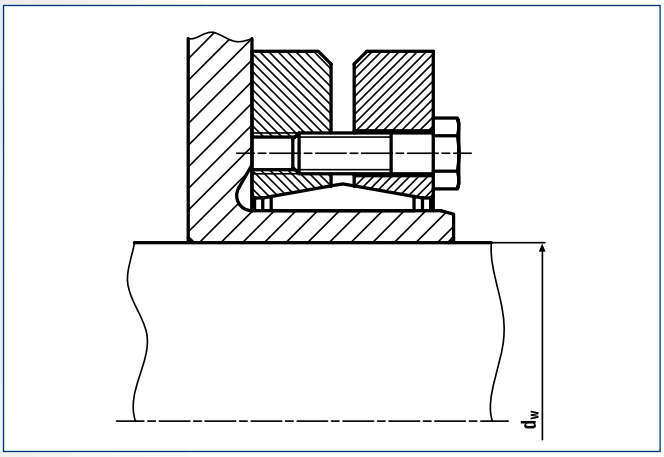

Shrink Disc® RINGFEDER® RfN 4061 · Location

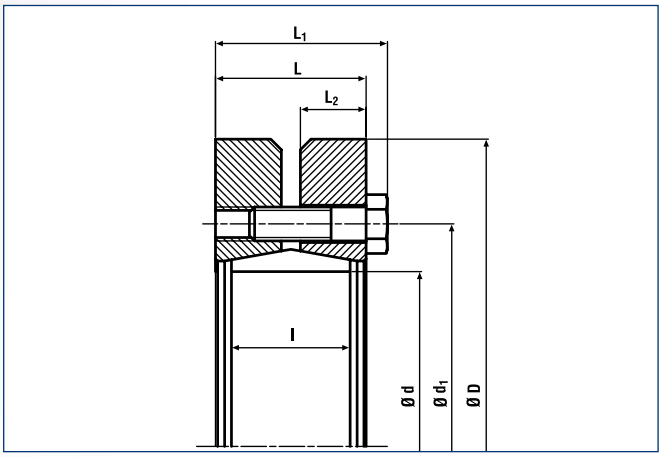

Shrink Disc® RINGFEDER® RfN 4061 · Dimensions

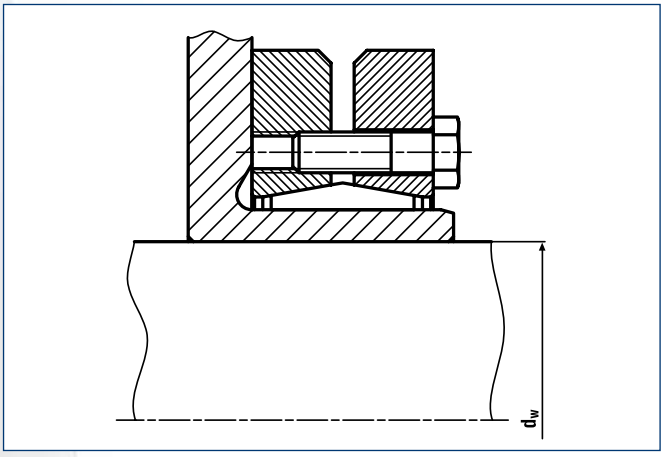

Axial bearing disc

Size	Shrink Disc® dimensions											Transmissible torques or axial forces				Locking screws DIN EN ISO 4014-10.9		Weight	
	d_w	Cw	d	Ch	D	L_1	L	d_1	L_2	l	T_A	T	F_{ax}	P	σ_v	Quantity	Thread		T_{max}
	Inch	Inch	Inch	Inch	Inch	Inch	Inch	Inch	Inch	lb-ft		lb-ft	lbs	psi	psi	n		lbs	lb-ft
14	0.394 0.472	0.0007	0.551	+0 -0.0013	1.457	0.591	0.472	0.945	0.197	0.354	1.5	13 26	1191 1798	56105	99470 119805	3	M5x12	0.2	17 32
16	0.472 0.551				1.614	0.728	0.591	1.063	0.246	0.472	3	33 59	2383 3192	61250	100940 154840	3	M5x16	0.2	41 74
18	0.551 0.630		0.709		1.732	0.728	0.591	1.142	0.246	0.472	3	63 96	3619 4518	72765	113680 185465	4	M5x16	0.2	78 120
20	0.591 0.669		0.787		1.811	0.807	0.669	1.260	0.276	0.472	3	81 112	4271 5170	81585	114415 152635	5	M5x16	0.3	102 140
24	0.748 0.827		0.945		1.969	0.906	0.748	1.417	0.315	0.591	3.7	162 236	7194 8318	81830	120540 165130	6	M5x18	0.4	199 295
30	0.945 1.024		1.181		2.047	0.984	0.846	1.654	0.354	0.669	3.7	280 347	8542 9666	65905	101185 124950	7	M5x20	0.7	347 435
36	1.024 1.181		1.417	+0 -0.0015	2.835	1.083	0.925	2.047	0.394	0.709	9	278 420	10790 13038	75215	94325 109270	5	M6x20	0.9	354 524
38	1.142 1.220	0.0013	1.496		2.835	1.181	1.024	2.165	0.433	0.827	9	479 553	13488 14387	72030	92365 115885	6	M6x25	1.1	605 686
40	1.181 1.260		1.575		2.953	1.122	0.965	2.244	0.413	0.748	9	465 538	13263 14162	76930	98000 113925	6	M6x25	1.2	583 671
44	1.260 1.417		1.732		3.150	1.181	1.024	2.402	0.433	0.787	9	546 752	14162 17085	76195	104860 111965	7	M6x25	1.3	679 937
48	1.417 1.575		1.890		3.150	1.181	1.024	2.677	0.433	0.866	9	538 819	13713 16410	61005	86730 89425	7	M6x25	1.2	671 1018
50	1.496 1.654		1.969		3.543	1.260	1.102	2.756	0.472	0.866	9	774 1136	20007 23154	78400	103635 115395	9	M6x25	1.8	966 1416
55	1.654 1.890		2.165	+0 -0.0018	3.937	1.358	1.201	2.953	0.512	0.906	9	856 1387	17759 21806	61740	84280 101920	8	M6x25	2.4	1069 1733
62	1.890 2.047		2.441		4.331	1.378	1.220	3.386	0.512	0.906	9	1637 2132	28100 30348	80850	99470 117845	12	M6x30	2.9	2043 2663

To continue see next page

Characteristics

Reduced dimensions with lower transmission values – especially for applications with restricted space.

Simplified manufacture – only plain shaft and bore diameters with easily achieved surface finish and tolerances are required.

Easy adjustability – No stops, steps, keyways, splines etc. are required, therefore hubs can be located and locked at any point or angle on the shaft.

Easy mounting – RINGFEDER® Shrink Discs® use standard screws and tightened using standard tools. No additional machining or fitting work is required.

Easy removal – after loosening the locking screws, the RINGFEDER® Shrink Disc® will self release and the hub will move freely on the shaft.

Low susceptibility to contamination – when the locking screws are tightened the contact (functional) surfaces are pressed firmly together and prevent contamination by dirt and moisture.

Highest reliability – due to the materials chosen and manufacturing processes used, RINGFEDER® Shrink Discs® can be tightened and released as often as required. If locking screws need replacing, they are standard items and thus easily available.

Size	Shrink Disc® dimensions											Transmissible torques or axial forces				Locking screws DIN EN ISO 4014-10.9		Weight	
	d_w	Cw	d	Ch	D	L_1	L	d_1	L_2	l	T_A	T	F_{ax}	P	σ_v	Quantity	Thread	WT	T_{max}
	Inch	Inch	Inch	Inch	Inch	Inch	Inch	Inch	Inch	lb-ft		lb-ft	lbs	psi	psi	n		lbs	lb-ft
68	1.969 2.362	0.0019	2.677	+0 -0.0018	4.528	1.378	1.220	3.386	0.512	0.906	9	1475 2323	21356 26976	61250	77910 101675	10	M6x30	3.1	1844 2899
75	2.165 2.559		2.953		5.433	1.496	1.280	3.937	0.551	0.984	22	1844 2913	26751 34844	66885	90160 100940	7	M8x30	3.7	2305 3642
80	2.362 2.756		3.150		5.709	1.496	1.280	3.937	0.551	0.984	22	2360 3393	27875 35518	62720	84525 95060	7	M8x30	4.2	2950 4241
85	2.362 2.756		3.346	+0 -0.0021	6.102	1.890	1.614	4.488	0.669	1.181	22	3172 4861	37991 47658	71050	91630 96040	10	M8x35	7.7	3961 6070
90	2.559 2.953		3.543		6.102	1.752	1.535	4.488	0.669	1.181	22	3503 5347	38216 47208	66395	84525 90160	10	M8x35	7.3	4380 6685
95	2.559 2.953		3.740		6.693	2.087	1.850	4.882	0.748	1.339	22	3968 6048	43836 53952	68600	85505 86975	12	M8x40	10	4956 7560
100	2.756 3.150		3.937		6.693	1.949	1.732	4.882	0.748	1.339	22	5089 6638	43836 53952	63210	79135 81830	12	M8x35	10	6361 8298
110	2.953 3.346		4.331		7.283	2.244	1.969	5.354	0.866	1.535	44	5310 7966	51479 58898	59780	73990 84035	9	M10x40	13	6638 9957
115	3.150 3.740	0.0027	4.528	+0 -0.0025	7.283	2.402	2.165	5.591	0.906	1.654	44	6786 11063	60696 74184	61005	73990 86485	10	M10x45	13	8482 13829
125	3.346 3.740											8113 11063	66541 79130		84525 84770				10141 13829
140	3.740 4.134		5.512		9.055	2.697	2.382	6.890	1.024	1.811	74	11137 14825	82502 95540	64680	81095 81095	10	M12x45	22	13921 18531
155	4.134 4.528		6.102		10.433	2.854	2.539	7.559	1.102	1.969	74	16226 20652	100486 114423	64435	78400 78890	12	M12x65	33	20283 25815
165	4.528 4.921		6.496		11.417	3.189	2.795	8.268	1.220	2.205	184	22864 28765	133756 147244	67865	80360 84035	8	M16x55	49	28580 35956
175	4.921 5.315	0.0031	6.890		11.811	3.189	2.795	8.661	1.220	2.205	184	26552 33190	136004 151740	63945	81830 79380	8	M16x90	49	33190 41488
185	5.315 5.709		7.283	+0 -0.0028	12.992	3.780	3.386	9.291	1.496	2.795	184	38353 45729	174894 193553	59780	74235 76440	10	M16x65	82	47941 57161
195	5.512 6.102		7.677		13.780	3.780	3.386	9.685	1.496	2.795	184	47941 60111	209738 240761	67865	80115 83790	12	M16x65	90	59927 75139
200	5.906 6.299		7.874		13.780	3.780	3.386	9.685	1.496	2.795	184	54579 63430	222552 242784	66150	78890 81830	12	M16x65	90	68224 79288

RfN 4061
split

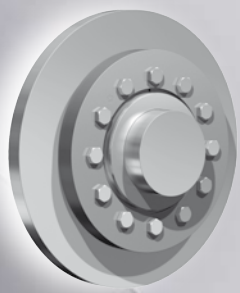

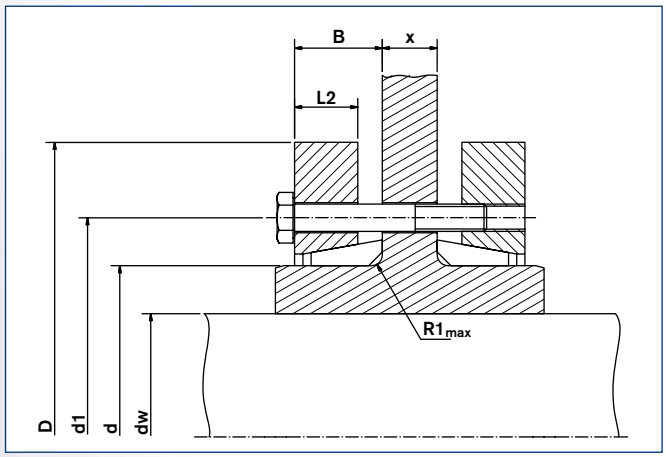

Shrink Disc® RINGFEDER® RfN 4061 split · Location

Split Shrink Discs®

In the application shown above special screws according to the dimension X are required, which have to be ordered accordingly. If the dimension X is above 2 x L (L taken from the Standard and the Light Duty Series) or above 1 x L (taken from the Heavy Duty Series) the transmissible torque may be reduced by up to 50%.

Half Shrink Discs®

With half shrink discs® HC/HT only 50% of stated T is transmitted.

type H**T** (**T**hreaded holes in thrust ring)

type H**C** (**C**learance holes in thrust ring)

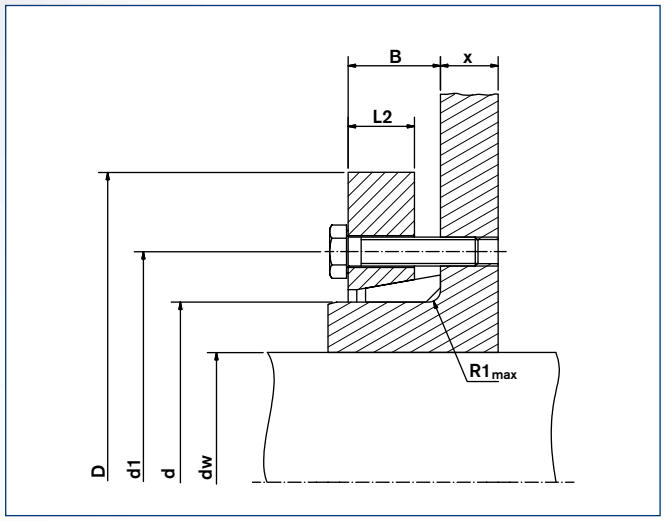

Shrink Disc® RINGFEDER® RfN 4061 HC · Dimensions

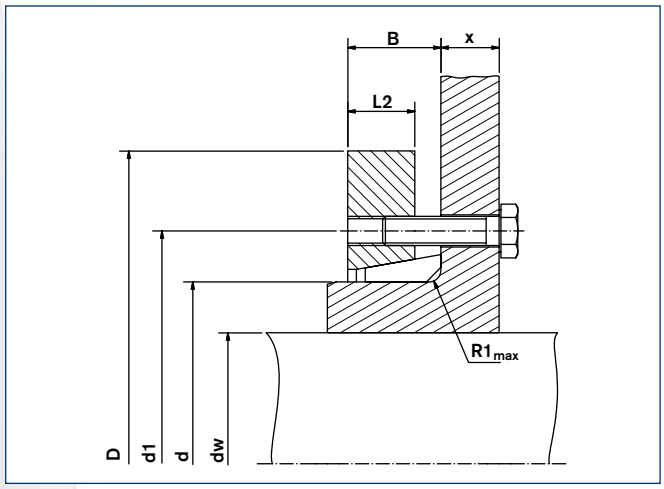

Shrink Disc® RINGFEDER® RfN 4061 HT version

Size	dw	Cw	d	Ch	D	L_2	d_1	B±0.039	R1 max	T_A	Transmissible torques or axial forces T	Transmissible torques or axial forces F_{ax}	Locking screws DIN EN ISO 4014-10.9 Quantity	Locking screws DIN EN ISO 4014-10.9 Thread	Weight WT	T_{max}
	Inch	Inch	Inch	Inch	Inch	Inch	Inch	Inch	Inch	lb-ft	lb-ft	lbs	n		lbs	lb-ft
20	0.591 0.669		0.787		1.811	0.197	1.260	0.453	0.051	3	4271 5170	81 112	5	M5	0,3	89 123
24	0.748 0.827		0.945	+0 -0.0013	1.969	0.246	1.417	0.463	0.051	4	7194 8318	162 236	6	M5	0,4	178 260
30	0.945 1.024	0.0007	1.181		2.047	0.246	1.654	0.502	0.051	4	8542 9666	280 347	7	M5	0,7	308 381
36	1.024 1.181		1.417		2.835	0.276	2.047	0.541	0.051	9	10790 13038	278 420	5	M6	0,9	306 462
38	1.142 1.220		1.496		2.835	0.315	2.165	0.600	0.051	9	13488 14387	479 553	6	M6	1,1	527 608
40	1.181 1.260		1.575		2.953	0.354	2.244	0.581	0.051	9	13263 14162	465 538	6	M6	1,2	511 592
44	1.260 1.417		1.732	+0 -0.0015	3.150	0.394	2.402	0.600	0.110	9	14162 17085	546 752	7	M6	1,3	600 828
48	1.417 1.575	0.0013	1.890		3.150	0.433	2.677	0.600	0.110	9	13713 16410	538 819	7	M6	1,2	592 901
50	1.496 1.654		1.969		3.543	0.413	2.756	0.640	0.110	9	20007 23154	774 1136	9	M6	1,8	852 1249
55	1.654 1.890		2.165		3.937	0.433	2.953	0.699	0.110	9	17759 21806	856 1387	8	M6	2,4	941 1525
62	1.890 2.047		2.441		4.331	0.433	3.386	0.699	0.110	9	28100 30348	1637 2132	12	M6	2,9	1801 2345
68	1.969 2.362		2.677	+0 -0.0018	4.528	0.472	3.386	0.699	0.110	9	21356 26976	1475 2323	10	M6	3,1	1623 2556
75	2.165 2.559	0.0019	2.953		5.433	0.512	3.937	0.778	0.110	22	26751 34844	1844 2913	7	M8	3,7	2028 3205
80	2.362 2.756		3.150		5.709	0.512	3.937	0.778	0.110	22	27875 35518	2360 3393	7	M8	4,2	2596 3732

To continue see next page

RfN 4061
split

Characteristics

Standard series – this range is the most popular, being used in most applications. High transmission values are possible, and by varying the screw tightening torque the Shrink Disc® can be adapted to the design specification.

Simplified manufacture – only plain shaft and bore diameters with easily achieved surface finish and tolerances are required.

Easy adjustability – No stops, steps, keyways, splines etc. are required, therefore hubs can be located and locked at any point or angle on the shaft.

Easy mounting – RINGFEDER® Shrink Discs® use standard screws and tightened using standard tools. No additional machining or fitting work is required.

Easy removal – after loosening the locking screws, the RINGFEDER® Shrink Disc® will self release and the hub will move freely on the shaft.

Low susceptibility to contamination – when the locking screws are tightened the contact (functional) surfaces are pressed firmly together and prevent contamination by dirt and moisture.

Size	d_w	Cw	d	Ch	D	L_2	d_1	B±0.039	R1 max	T_A	Transmissible torques or axial forces T	Transmissible torques or axial forces F_{ax}	Locking screws DIN EN ISO 4014-10.9 Quantity	Locking screws DIN EN ISO 4014-10.9 Thread	Weight WT	T_{max}
	Inch	Inch	Inch	Inch	Inch	Inch	Inch	Inch	Inch	lb-ft	lb-ft	lbs	n		lbs	lb-ft
85	2.362 2.756	0.0019	3.346	+0 -0.0021	6.102	0.512	4.488	0.906	0.130	22	37991 47658	3172 4861	10	M8	7.7	3489 5347
90	2.559 2.953	0.0019	3.543	+0 -0.0021	6.102	0.551	4.488	0.906	0.130	22	38216 47208	3503 5347	10	M8	7.3	3854 5882
95	2.559 2.953	0.0019	3.740	+0 -0.0021	6.693	0.551	4.882	0.925	0.130	22	43836 53952	3968 6048	12	M8	10.4	4365 6653
100	2.756 3.150	0.0019	3.937	+0 -0.0021	6.693	0.669	4.882	1.004	0.130	22	43836 53952	5089 6638	12	M8	10.4	5598 7302
110	2.953 3.346	0.0019	4.331	+0 -0.0021	7.283	0.669	5.354	1.122	0.189	44	51479 58898	5310 7966	9	M10	13.0	5841 8762
115	3.150 3.740	0.0027	4.528	+0 -0.0025	7.283	0.748	5.591	1.260	0.189	44	60696 74184	6786 11063	10	M10	13.2	7464 12170
125	3.346 3.740	0.0027	4.921	+0 -0.0025	8.465	0.748	6.299	1.260	0.189	44	77556 77781	8113 11063	12	M10	18.3	8924 12170
140	3.740 4.134	0.0027	5.512	+0 -0.0025	9.055	0.866	6.890	1.398	0.189	74	7418 74409	11137 14825	10	M12	22.1	12251 16307
155	4.134 4.528	0.0027	6.102	+0 -0.0025	10.433	1.102	3.622	1.467	0.189	74	71936 72386	16226 20652	12	M12	33.1	17849 22717
165	4.528 4.921	0.0027	6.496	+0 -0.0025	11.417	1.220	8.268	1.594	0.189	184	22864 28765	133756 147244	8	M16	48.5	25151 31641
175	4.921 5.315	0.0031	6.890	+0 -0.0025	11.811	1.220	8.661	1.594	0.189	184	26552 33190	136004 151740	8	M16	48.5	29207 36509
185	5.315 5.709	0.0031	7.283	+0 -0.0028	12.992	1.496	9.291	1.890	0.189	184	38353 45729	174894 193553	10	M16	81.6	42188 50302
195	5.512 6.102	0.0031	7.677	+0 -0.0028	13.780	1.496	9.685	1.890	0.189	184	47941 60111	209738 240761	12	M16	90.4	52736 66122
200	5.906 6.299	0.0031	7.874	+0 -0.0028	13.780	1.496	9.685	1.890	0.189	184	54579 63430	222552 242784	12	M16	90.4	60037 69773

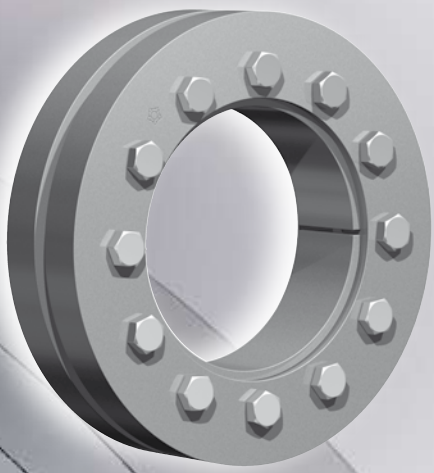

Characteristics

Standard series – this range is the most popular, being used in most applications. High transmission values are possible, and by varying the screw tightening torque the Shrink Disc® can be adapted to the design specification.

Simplified manufacture – only plain shaft and bore diameters with easily achieved surface finish and tolerances are required.

Easy adjustability – No stops, steps, key-ways, splines etc. are required, therefore hubs can be located and locked at any point or angle on the shaft.

Easy mounting – RINGFEDER® Shrink Discs® use standard screws and tightened using standard tools. No additional machining or fitting work is required.

Easy removal – after loosening the locking screws, the RINGFEDER® Shrink Disc® will self release and the hub will move freely on the shaft.

Low susceptibility to contamination – when the locking screws are tightened the contact (functional) surfaces are pressed firmly together and prevent contamination by dirt and moisture.

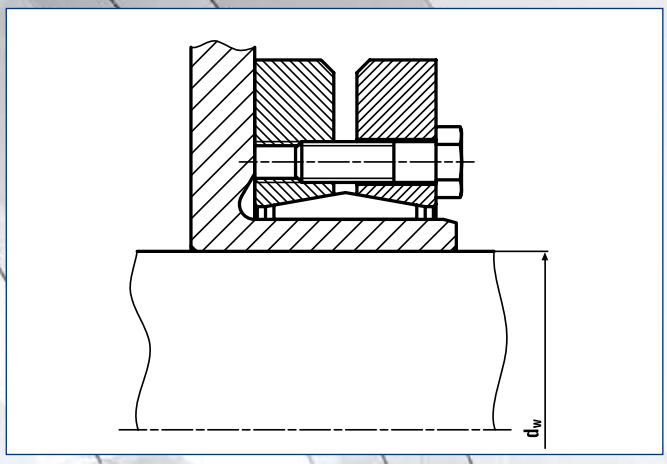

Shrink Disc® RINGFEDER® RfN 4071 · Location

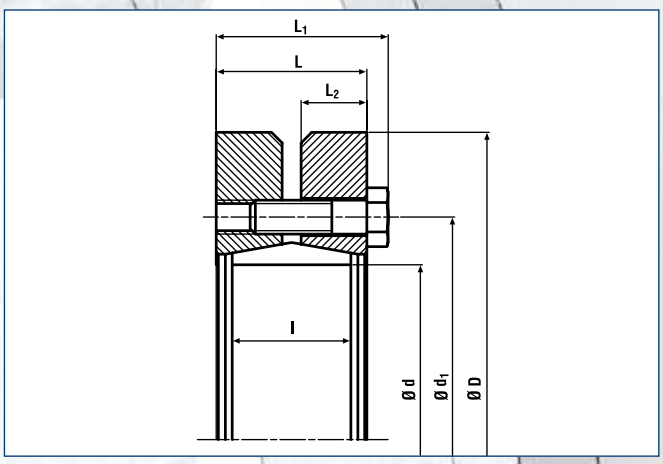

Shrink Disc® RINGFEDER® RfN 4071 · Dimensions

Size	Shrink Disc® dimensions											Transmissible torques or axial forces				Locking screws DIN EN ISO 4014-10.9		Weight	
	d_w	C_w	d	Ch	D	L_1	L	d_1	L_2	l	T_A	T	F_{ax}	P	σ_v	Quantity	Thread		T_{max}
	Inch	Inch	Inch	Inch	Inch	Inch	Inch	Inch	Inch	Inch	lb-ft	lb-ft	lbs	psi		n		lbs	lb-ft
220	6.299 6.693	0.0031	8.661	+0 -0.0028	14.567	4.488	4.094	10.630	1.850	3.465	184	70068 81132	267512 289992	35960	42775 43935	15	M16x80	119	87585 101415
240	6.693 7.480		9.449		15.945	4.803	4.291	11.614	1.929	3.622	361	88507 115059	329107 376540	39440	44805 48430	12	M20x80	148	110634 143824
260	7.480 8.268	0.0035	10.236	+0 -0.0032	16.929	5.236	4.724	12.638	2.126	4.055	361	120960 151200	395648 451848	37990	44370 47705	14	M20x90	181	151200 189000
280	8.268 9.055		11.024		18.110	5.787	5.276	13.622	2.362	4.488	361	160051 199141	469832 528280	36395	42775 46980	16	M20x100	225	200063 248927
300	9.055 9.646		11.811		19.094	6.102	5.591	14.331	2.520	4.803	361	202829 232331	546489 592573	35670	42195 45240	18	M20x100	260	253536 290414
320	9.449 10.236		12.598	+0 -0.0035	20.472	6.102	5.591	15.197	2.520	4.803	361	230119 275847	595046 651920	37265	42485 46400	20	M20x100	289	287648 344809
340	9.843 10.630	0.0040	13.386		22.441	6.654	6.142	16.063	2.795	5.276	361	287648 339278	701151 764320	38280	42775 45965	24	M20x110	410	359561 424097
350	10.630 11.220		13.780		22.835	6.890	6.378	17.008	2.874	5.512	361	326002 368780	736445 786800	35525	41905 44515	24	M20x110	430	407502 460975
360	11.024 11.614		14.173		23.228	6.890	6.378	17.008	2.874	5.512	361	341490 385006	744088 794893	34510	40890 43210	24	M20x110	450	426863 481258
380	11.417 12.205		14.961		25.394	7.205	6.614	18.031	2.992	5.669	620	418197 485314	878968 954950	38135	43500 46400	20	M24x120	527	522746 606643
390	11.811 12.598		15.354		25.984	7.205	6.614	18.425	2.992	5.669	620	460237 529568	935168 1008003	39150	44225 47995	21	M24x120	573	575297 661960
400	12.402 12.992		15.748		26.772	7.205	6.614	18.898	2.992	5.669	620	494165 548745	957648 1011600	38135	43790 46980	21	M24x120	617	617707 685931
420	12.992 13.780		16.535		27.165	7.992	7.402	19.843	3.386	6.457	620	575297 663804	1090280 1173456	36395	42775 46690	24	M24x130	697	719121 829755
440	13.386 14.173	0.0044	17.323		29.528	8.543	7.953	20.748	3.583	6.969	620	594473 676343	1065552 1144232	32335	38715 41325	24	M24x140	900	743092 845428
460	14.173 14.961		18.110	+0 -0.0038	30.315	8.543	7.953	21.535	3.583	6.969	620	737560 -	1274616 1360040	35960	42485 43645 45530	28	M24x140	926	921950 -
480	14.961 15.748		18.898		31.496	8.976	8.386	22.441	3.780	7.402	620	862945 966204	1382520 1472440	34800	40890 44370	30	M24x140	1114	- -
500	15.748 16.535	0.0048	19.685		33.465	9.055	8.386	23.228	3.780	7.402	922	967679 -	1474688 1557864	35090	41180 45095	24	M27x150	1268	- -

RfN 4071
split

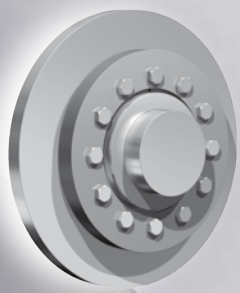

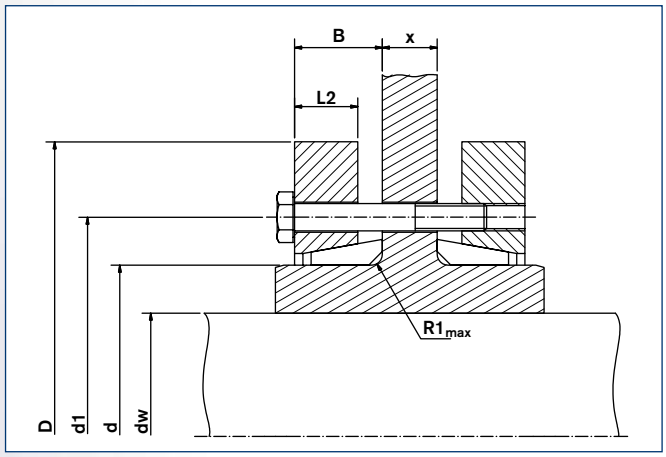

Shrink Disc® RINGFEDER® RfN 4071 split · Location

Split Shrink Discs®

In the application shown above special screws according to the dimension X are required, which have to be ordered accordingly. If the dimension X is above 2 x L (L taken from the Standard and the Light Duty Series) or above 1 x L (taken from the Heavy Duty Series) the transmissible torque may be reduced by up to 50%.

Half Shrink Discs®

With half shrink discs® HC/HT only 50% of stated T is transmitted.

type H**T** (**T**hreaded holes in thrust ring)

type H**C** (**C**learance holes in thrust ring)

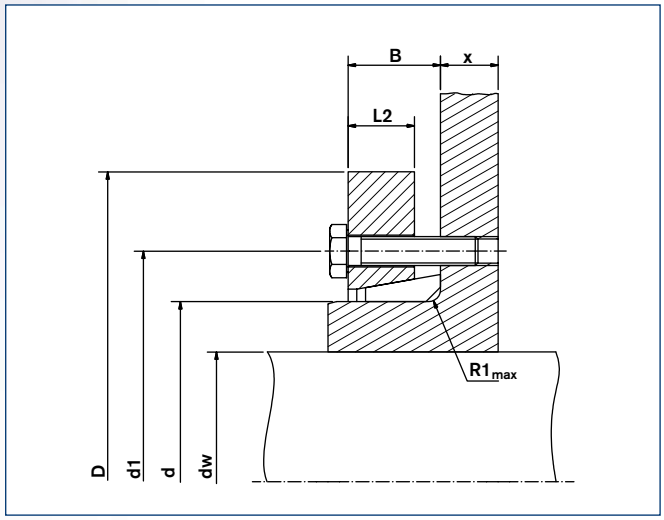

Shrink Disc® RINGFEDER® RfN 4071 HC · Dimensions

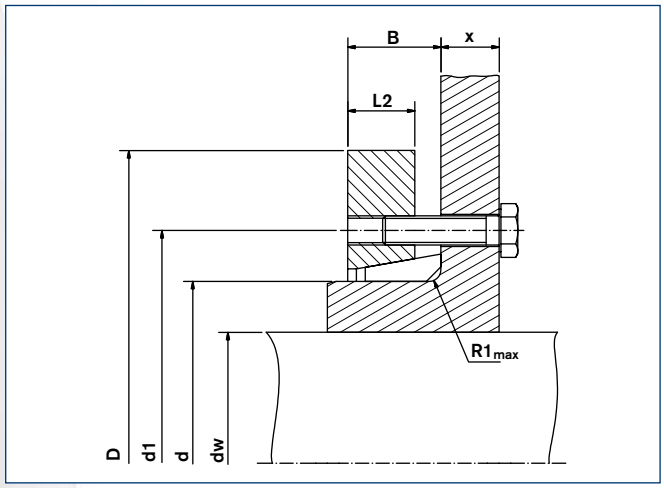

Shrink Disc® RINGFEDER® RfN 4071 HT version

Size	Shrink Disc® dimensions										Transmissible torques or axial forces		Locking screws DIN EN ISO 4014-10.9		Weight	
	d_w	Cw	d	Ch	D	L_2	d_1	B±0.039	R1 max	T_A	T	F_{ax}	Quantity	Thread	WT	T_{max}
	Inch	Inch	Inch	Inch	Inch	Inch	Inch	Inch	Inch	lb-ft	lb-ft	lbs	n		lbs	lb-ft
220	6.299 6.693	0.0031	8.661	+0 -0.0028	14.567	1.850	10.630	2.343	0.291	184	70068 81132	267512 289992	15	M16	119	77075 89245
240	6.693 7.480		9.449		15.945	1.929	11.614	2.441	0.291	361	88507 115059	329107 376540	12	M20	148	97358 126565
260	7.480 8.268	0.0035	10.236	+0 -0.0032	16.929	2.126	12.638	2.657	0.291	361	120960 151200	395648 451848	14	M20	181	133056 166320
280	8.268 9.055		11.024		18.110	2.362	13.622	3.012	0.331	361	160051 179965 199141	469832 499056 528280	16	M20	225	176056 197961 219055
300	9.055 9.646		11.811		19.094	2.520	14.331	3.130	0.331	361	202829 232331	546489 592573	18	M20	260	223112 255565
320	9.449 10.236		12.598	+0 -0.0035	20.472	2.520	15.197	3.130	0.331	361	230119 275847	595046 651920	20	M20	289	253131 303432
340	9.843 10.630	0.0040	13.386		22.441	2.795	16.063	3.406	0.331	361	287648 339278	701151 764320	24	M20	410	316413 373205
350	10.630 11.220		13.780		22.835	2.874	17.008	3.524	0.331	361	326002 368780	736445 786800	24	M20	430	358602 405658
360	11.024 11.614		14.173		23.228	2.874	17.008	3.524	0.331	361	341490 385006	744088 794893	24	M20	450	375639 423507
380	11.417 12.205		14.961		25.394	2.992	18.031	3.642	0.331	620	418197 485314	878968 954950	20	M24	527	460016 533846
390	11.811 12.598		15.354		25.984	2.992	18.425	3.642	0.331	620	460237 529568	935168 1008003	21	M24	573	506261 582525
400	12.402 12.992		15.748		26.772	2.992	18.898	3.642	0.331	620	494165 548745	957648 1011600	21	M24	617	543582 603619
420	12.992 13.780		16.535	+0 -0.0038	27.165	3.386	19.843	4.193	0.390	620	575297 663804	1090280 1173456	24	M24	697	632826 730184
440	13.386 14.173	0.0044	17.323		29.528	3.583	20.748	4.469	0.390	620	594473 676343	1065552 1144232	24	M24	900	653921 743977
460	14.173 14.961		18.110		30.315	3.583	21.535	4.469	0.390	620	737560 1032584	1274616 1360040	28	M24	926	811316 1135842
480	14.961 15.748		18.898		31.496	3.780	22.441	4.685	0.390	620	862945 966204	1382520 1472440	30	M24	1114	949240 1062824
500	15.748 16.535	0.0048	19.685		33.465	3.780	23.228	4.685	0.390	922	967679 1073150	1474688 1557864	24	M27	1268	1064447 1180465

RfN 4073

Ultra Light Duty Series

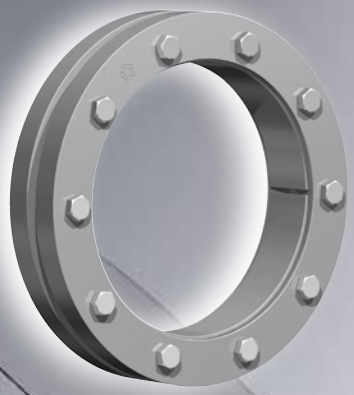

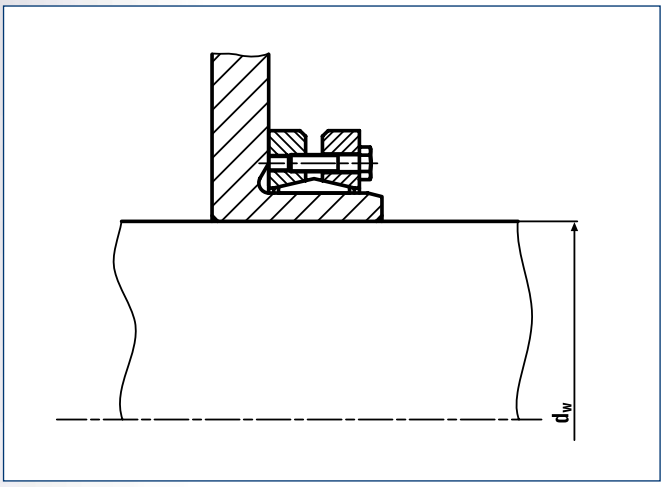

Shrink Disc® RINGFEDER® RfN 4073 · Location

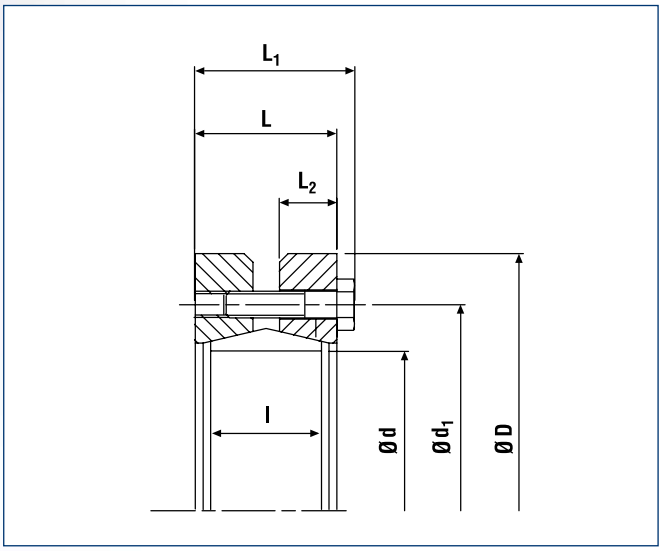

Shrink Disc® RINGFEDER® · Dimensions

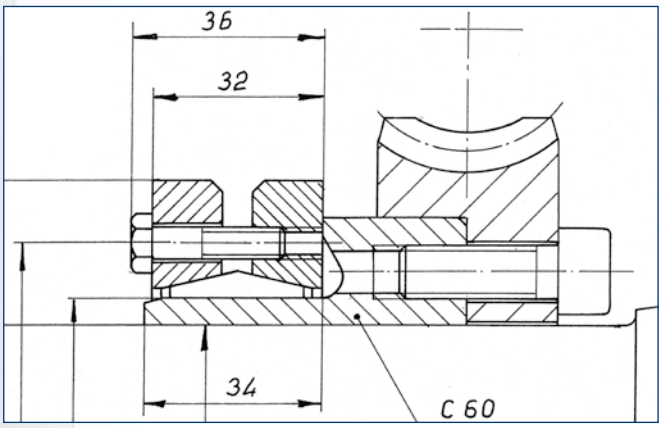

Worm gear (metric example)

Size	Shrink Disc® dimensions											Transmissible torques or axial forces				Locking screws DIN EN ISO 4014-10.9		Weight	
	d_w	Cw	d	Ch	D	L_1	L	d1	L_2	l	T_A	T	F_{ax}	P	σ_v	Quantity	Thread	WT	T_{max}
	Inch	Inch	Inch	Inch	Inch	Inch	Inch	Inch	Inch	Inch	lb-ft	lb-ft	lbs	psi		n		lbs	lb-ft
14	0.354 0.433	0.0007	0.551	+0 -0.0013	1.339	0.551	0.472	0.945	0.197	0.354	1.8	6.6 15	562 1034	28130	56405 52345	3	M4x10	0.2	13 26
16	0.433 0.512		0.630		1.654	0.583	0.472	1.181	0.197	0.354	1.8	24 38	1619 2226	38280	59160 63800	4	M4x10	0.2	30 47
20	0.551 0.630		0.787		1.850	0.689	0.551	1.339	0.236	0.394	2.2	30 46	1641 2158	27985	44950 46400	4	M5x12	0.3	38 58
22	0.630 0.709		0.866		1.969	0.728	0.591	1.457	0.256	0.394	2.2	50 69	2360 2922	31755	46400 49445	5	M5x12	0.4	63 87
24	0.709 0.787		0.945		2.047	0.728	0.591	1.535	0.256	0.394	2.2	60 77	2473 2922	29145	42630 48430	5	M 5x12	0.4	74 97
28	0.787 0.945		1.102		2.205	0.728	0.591	1.693	0.256	0.394	2.2	57 97	2158 3035	24940	39150 41905	5	M 5x12	0.4	71 122
31	0.945 1.063		1.220		2.362	0.728	0.591	1.811	0.256	0.394	2.2	81 114	2473 3147	22620	35380 38280	5	M 5x12	0.4	102 142
36	1.102 1.260		1.417	+0 -0.0015	2.598	0.728	0.591	2.047	0.256	0.394	2.2	119 159	3147 3709	23345	33785 47560	6	M 5x12	0.5	148 198
40	1.299 1.378	0.0013	1.575		2.677	0.728	0.591	2.165	0.256	0.394	3.0	195 236	4496 5058	28130	47125 48720	6	M 5x12	0.5	244 292
46	1.496 1.654		1.811		3.150	0.886	0.748	2.480	0.315	0.551	3.0	295 406	5845 7306	23200	40310 47270	8	M 5x16	1.0	371 504
51	1.654 1.772		2.008		3.386	0.886	0.748	2.697	0.315	0.551	3.0	325 406	5845 6744	20880	36105 37845	8	M 5x16	1.1	406 502
56	1.811 1.969		2.205	+0 -0.0018	3.583	0.886	0.748	2.874	0.315	0.551	3.0	413 524	6744 7868	21460	34945 37410	9	M 5x16	1.1	509 656
61	2.047 2.205		2.402		3.780	0.886	0.748	3.031	0.315	0.551	3.0	524 671	7643 8992	21895	41325 44805	10	M 5x16	1.2	656 833
66	2.283 2.441	0.0019	2.598		3.937	0.886	0.748	3.228	0.315	0.551	3	627 782	8205 9554	20300	38570 44660	10	M 5x16	1.3	789 974
70	2.441 2.559		2.756		4.331	1.083	0.945	3.543	0.394	0.709	4.4	1040 1202	12701 14050	22185	40455 46690	10	M5x20	2.1	1305 1505
75	2.598 2.756		2.953		4.488	1.083	0.945	3.661	0.394	0.709	4.4	1092 1305	12364 14162	20590	37120 43645	10	M5x20	2.1	1357 1630
80	2.795 2.953		3.150		4.724	1.083	0.945	3.976	0.394	0.709	4.4	1475 1719	15736 17422	23345	39005 47705	12	M5x20	2.3	1844 2154
85	2.992 3.150		3.346	+0 -0.0021	5.039	1.260	1.102	4.134	0.453	0.866	9	1748 2036	17422 19333	19865	35670 45820	8	M6x25	3.1	2183 2545
94	3.228 3.465		3.701		5.512	1.260	1.102	4.685	0.453	0.866	9	1696 2154	15624 18658	17980	36685 41905	8	M6x25	3.7	2117 2699
105	3.622 3.858		4.134		5.906	1.260	1.102	5.039	0.453	0.866	9	2213 2714	18209 21019	18125	34655 38570	9	M6x25	3.9	2766 3393

To continue see next page

RfN 4073

Ultra Light Duty Series

Characteristics

Ultra Light Duty Series – this range is a very compact design with low inertia values. It is ideally suited for mechanical seal and small gearbox applications.

Simplified manufacture – only plain shaft and bore diameters with easily achieved surface finish and tolerances are required.

Easy adjustability – No stops, steps, keyways, splines etc. are required therefore hubs can be located and locked at any point or angle on the shaft.

Easy mounting – RINGFEDER® Shrink Discs® use standard screws and tightened using standard tools. No additional machining or fitting work is required.

Easy removal– after loosening the locking screws, the RINGFEDER® Shrink Disc® will self release and the hub will move freely on the shaft.

Low susceptibility to contamination – when the locking screws are tightened the contact (functional) surfaces are pressed firmly together and prevent contamination by dirt and moisture.

Size	Shrink Disc® dimensions											Transmissible torques or axial forces				Locking screws DIN EN ISO 4014-10.9		Weight	
	d_w	Cw	d	Ch	D	L_1	L	d1	L_2	l	T_A	T	F_{ax}	P	σ_v	Quantity	Thread	WT	T_{max}
	Inch	Inch	Inch	Inch	Inch	Inch	Inch	Inch	Inch		lb-ft	lb-ft	lbs	psi		n		lbs	lb-ft
112	3.937 4.173	0.0019	4.409	+0 -0.0021	6.220	1.260	1.102	5.315	0.453	0.866	9	2500 3024	18996 21581	16965	32625 38280	9	M6x25	4.2	3127 3776
120	4.173 4.409		4.724		6.457	1.417	1.260	5.551	0.512	0.984	9	2876 3444	20569 23379	15515	30160 33350	10	M6x25	4.9	3592 4300
130	3.937 4.173		5.118		6.772	1.417	1.260	5.945	0.512	0.984	9	3135 3762	22255 23379	14355	27695 32625	10	M6x25	4.9	3924 4706
140	4.921 5.118	0.0027	5.512	+0 -0.0025	7.165	1.417	1.260	6.339	0.512	0.984	9	4197 4757	30348 27875	15950	30160 31900	12	M 6x25	5.3	5244 5945
150	5.315 5.512		5.906		7.638	1.417	1.260	6.732	0.512	0.984	9	4632 5200	26077 28100	14935	28130 29870	12	M6x25	6.0	5782 6498
160	5.591 5.827		6.299		8.031	1.417	1.260	7.126	0.512	0.984	9	4691 5355	24953 27426	13920	25955 27115	12	M6x25	6.2	5856 6690

More sizes on request

RfN 4091

Heavy Duty Series

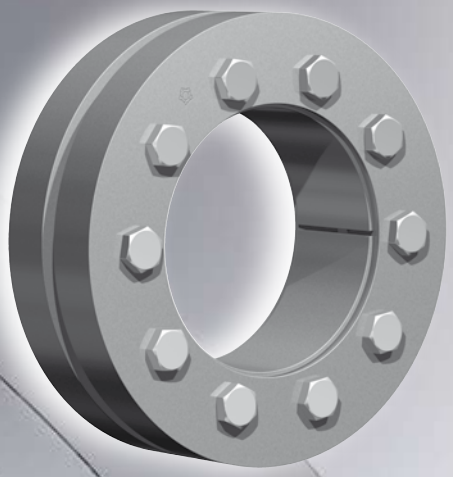

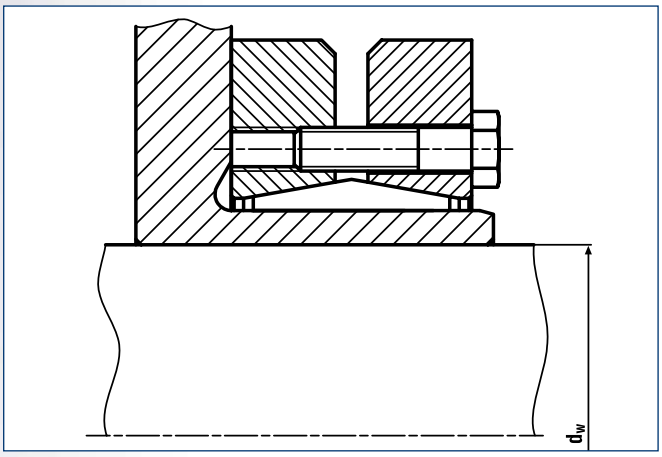

Shrink Disc® RINGFEDER® RfN 4091 · Location

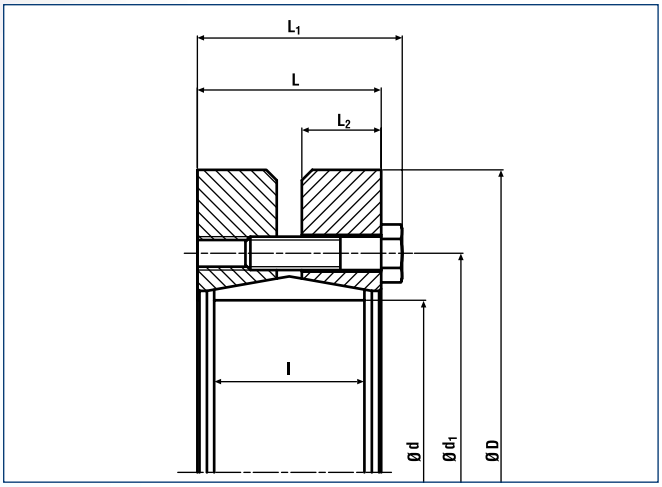

Shrink Disc® RINGFEDER® RfN 4091 · Dimensions

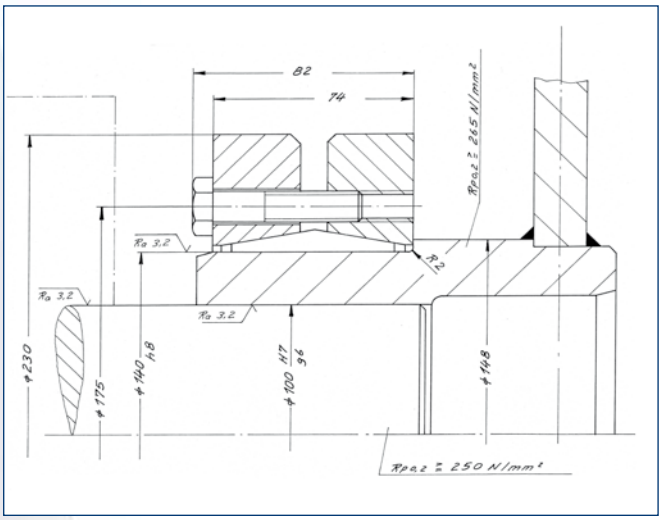

Lever · metric example

Size	Shrink Disc® dimensions												Transmissible torques or axial forces				Locking screws DIN EN ISO 4014-10.9		Weight	
	d_w		Cw	d	Ch	D	L_1	L	d1	L_2	l	T_A	T	F_{ax}	P	σ_v	Quantity	Thread	WT	T_{max}
	mm	Inch	Inch	Inch	Inch	Inch	Inch	Inch	Inch	Inch	Inch	lb-ft	lb-ft	lbs	psi		n		lbs	lb-ft
	38	1.496											1328	23829		59450				1660
50	40			1.969	+0 -0.0015	3.740	1.752	1.535	2.874	0.669	1.181	18			41325		7	M8x35	3.1	
	42	1.654											1770	27875		74095				2213
	42	1.654											1660	27426		58580				2075
55	45		0.0013	2.165		4.134	1.752	1.535	3.071	0.669	1.181	21			42050		7	M8x35	3.7	
	48	1.890											2360	33270		83230				2950
	48	1.890											2176	30123		54520				2720
62	62			2.441		4.528	1.752	1.535	3.346	0.669	1.181	22			40020		7	M8x35	4.4	
	52	2.047											2655	32596		66410				3319
	50	1.969											2360	32596		52345				2950
68	55			2.677	+0 -0.0018	4.724	1.752	1.535	3.622	0.669	1.181	22			41615		8	M8x35	4.6	
	58	2.283											3835	40914		78155				4794
	55	2.165											3393	43386		58435				4241
75	60			2.953		5.709	2.087	1.811	4.134	0.787	1.417	44			43790		7	M10x40	8.4	
	65	2.559											5163	55975		78300				6454
	60	2.362											4204	44960		54955				5255
80	65			3.150		5.709	2.087	1.811	4.134	0.787	1.417	44	5163		41035		7	M10x40	7.9	
	70	2.756											6196	56874		73950				7744
	65	2.559	0.0019										4942	48782		49155				6177
90	70			3.543		6.299	2.244	1.969	4.567	0.866	1.575	44			37555		8	M10x40	11	
	75	2.953											7081	60471		57275				8851
	70	2.756											6491	59572		48430				8113
100	75			3.937	+0 -0.0021	6.693	2.402	2.126	4.961	0.906	1.732	44			38425		10	M10x45	12	
	80	3.150											8998	72161		53360				11248
	75	2.953											8113	69238		45820				10141
110	80			4.331		7.283	2.638	2.362	5.433	1.024	1.969	44			36830		12	M10x45	17	
	85	3.346											10842	79130		52200				13553
	85	3.346											11063	79804		47995				13829
125	90			4.921		8.465	2.874	2.559	6.299	1.102	2.165	74			35960		10	M12x50	24	
	95	3.740											14751	94866		48865				18439
	90	3.543											12391	94416		47560				15489
135	95			5.315		8.346	3.268	2.953	6.693	1.260	2.362	74			36250		12	M12x55	23	
	105	4.134											18365	119144		48720				22953
	95	3.740											15194	97338		45385				18992
140	100			5.512		9.055	3.228	2.913	6.890	1.260	2.362	74			35235		12	M12x55	29	
	105	4.134	0.0027										19545	112400		46110				24432
	90	3.543											29355	198948		60030				36694
140	100			5.512		11.969	4.173	3.780	7.283	1.654	3.150	184			49735		12	M16x70	77	
	110	4.331			+0 -0.0025								46909	258520		74385				58636
	105	4.134											19914	122741		44950				24893
155	110			6.102		10.354	3.543	3.228	7.795	1.378	2.598	74			36250		15	M12x60	43	
	115	4.528											25077	140275		45530				31346
	115	4.528											30240	166352		46980				37800
165	120			6.496		11.417	3.858	3.465	8.268	1.496	2.835	184			39150		10	M16x65	57	
	125	4.921											37394	183212		49880				46743
	125	4.921											34665	168600		45820				43332
175	130			6.890		11.811	3.858	3.465	8.661	1.496	2.835	184			36830		10	M16x65	64	
	135	5.315											42041	188832		47125				52551
	125	4.921											51629	260768		53070				64537
175	130			6.890		11.811	4.961	4.567	9.252	1.969	3.622	184			43500		15	M16x80	81	
	135	5.315											62693	289992		55680				78366
	135	5.315											53104	247280		47415				66380
185	140		0.0031	7.283		12.992	4.803	4.409	9.291	1.969	3.622	184			38135		14	M16x80	104	
	145	5.709											63430	269760		50025				88507
	135	5.315											66602	316743		55970				83248
190	140			7.480	+0 -0.0028	13.780	4.921	4.409	9.843	1.969	3.622	347			47850		12	M20x90	115	
	155	6.102											91457	378788		63800				114322
	140	5.512											55317	241660		44950				78366
195	150			7.677		13.780	4.803	4.409	9.685	1.969	3.622	184			36250		14	M16x80	117	
	155	6.102											70806	277628		47850				92195

To continue see next page

RfN 4091

Heavy Duty Series

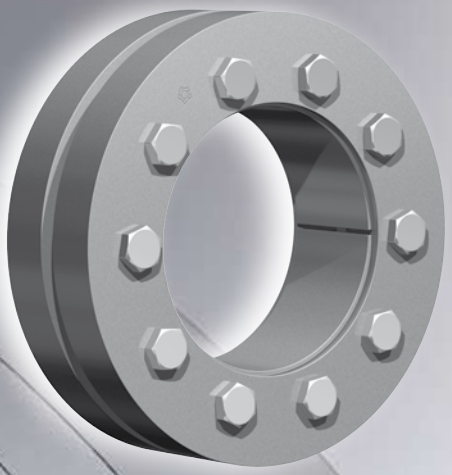

Characteristics

Highest transmission values – for heavy duty applications.

Simplified manufacture – only plain shaft and bore diameters with easily achieved surface finish and tolerances are required.

Easy adjustability – No stops, steps, keyways, splines etc. are required therefore hubs can be located and locked at any point or angle on the shaft.

Easy mounting – RINGFEDER® Shrink Discs® use standard screws and tightened using standard tools. No additional machining or fitting work is required.

Easy removal – after loosening the locking screws, the RINGFEDER® Shrink Disc® will self release and the hub will move freely on the shaft.

Low susceptibility to contamination – when the locking screws are tightened the contact (functional) surfaces are pressed firmly together and prevent contamination by dirt and moisture.

Highest reliability – due to the materials chosen and manufacturing processes used, RINGFEDER® Shrink Discs® can be tightened and released as often as required. If locking screws need replacing, they are standard items and thus easily available.

Size	d_w	Cw	d	Ch	D	L_1	L	d1	L_2	l	T_A	Transmissible torques or axial forces T	F_{ax}	P	σ_v	Locking screws DIN EN ISO 4014-10.9 Quantity	Thread	Weight WT	T_{max}
	Inch	Inch	Inch	Inch	Inch	Inch	Inch	Inch	Inch	Inch	lb-ft	lb-ft	lbs	psi		n		lbs	lb-ft
200	5.709		7.874		13.780	4.803	4.409	9.685	1.969	3.622	184	62693	712616	37845	45965	15	M16x80	110	117088
	6.102			+0 -0.0028								73756	741840		47850				135066
220	6.299		8.661		14.567	5.669	5.276	10.630	2.362	4.488	184	93670	357432	36975	44805	20	M16x90	143	142902
	6.693											108053	386656		47125				182546
240	6.693	0.0031	9.449	+0 -0.0028	15.945	6.181	5.669	11.614	2.559	4.724	361	114322	409136	37845	44225	15	M20x100	192	196375
	7.480											146037	467584		49445				247083
260	7.480		10.236		16.929	6.811	6.299	12.638	2.835	5.354	361	157100	508048	36975	44660	18	M20x110	220	262756
	8.268											197666	579984		50170				327292
280	8.268		11.024	+0 -0.0032	18.110	7.283	6.772	13.622	3.071	5.827	361	210205	615952	36830	44950	21	M20x120	291	314385
	9.055											261834	694632		51620				363248
300	9.055	0.0035	11.811		19.094	7.441	6.929	14.331	3.150	5.984	361	251508	665408	35090	43210	22	M20x120	309	314385
	9.646											290599	722732		47415				363248
320	9.449		12.598		20.472	7.756	7.244	15.197	3.228	6.299	361	278798	708120	34075	40890	24	M20x130	364	348497
	10.236											332640	780056		46110				415799
340	9.843		13.386		22.441	8.465	7.874	16.535	3.622	6.929	620	361036	878968	36685	42775	21	M24x130	529	451295
	10.630											426310	961020		47270				532887
350	10.630		13.780		22.835	8.465	7.874	16.732	3.622	6.929	620	410083	926626	35815	44080	21	M24x130	544	512604
	11.220											463925	992492		47995				579907
360	11.024	0.0040	14.173	+0 -0.0035	23.228	8.622	8.031	17.008	3.622	7.087	620	451387	982376	35525	43935	22	M24x140	551	564233
	11.614											508179	1049816		48140				635224
380	11.417		14.961		25.394	8.622	8.031	18.031	3.622	7.087	620	455812	959896	33785	40455	22	M24x140	705	569765
	12.205											530306	1044196		44515				662882
390	11.811		15.354		25.984	8.937	8.346	18.425	3.780	7.402	620	522192	1059932	34220	41180	24	M24x140	771	652741
	12.598											600743	1144232		46110				750836
400	12.402		15.748		26.772	8.937	8.346	18.898	3.780	7.402	620	564233	1091404	33495	41325	24	M24x140	815	705292
	12.992											623238	1152100		45240				779048
420	12.992		16.535		27.165	9.961	9.370	19.843	4.370	8.425	620	736822	1361164	34945	43790	30	M24x150	904	921028
	13.780											840818	1464572		49590				1051023
440	13.386	0.0044	17.323		29.528	10.591	9.921	20.748	4.528	8.819	922	780338	1400504	33495	41035	24	M27x170	1190	975423
	14.173											888022	1503912		45240				1110028
460	14.173		18.110	+0 -0.0038	30.315	10.591	9.921	21.535	4.528	8.819	922	973579	1672512	37265	45240	28	M27x170	1190	1216974
	14.961											1106340	1787160		50170				1382925
480	14.961		18.898		31.496	11.457	10.787	22.835	5.039	9.685	922	1132155	1816384	34945	43790	30	M27x180	1433	1415193
	15.748											1268603	1933280		49300				1585754
500	15.748	0.0048	19.685		33.465	11.457	10.787	23.622	5.039	9.685	922	1290730	1967000	35670	44805	32	M27x180	1653	1613413
	16.535											1430866	2079400		50750				1788583

More sizes on request

RfN 4091
split

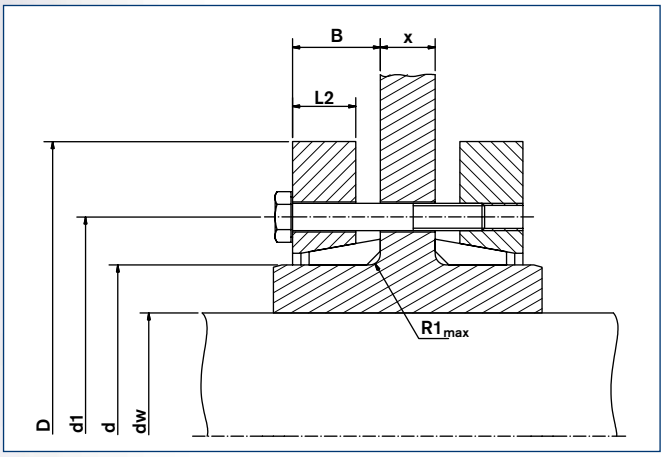

Shrink Disc® RINGFEDER® RfN 4091 · Location

Split Shrink Discs®

In the application shown above special screws according to the dimension X are required, which have to be ordered accordingly. If the dimension X is above 2 x L (L taken from the Standard and the Light Duty Series) or above 1 x L (taken from the Heavy Duty Series) the transmissible torque may be reduced by up to 50%.

Half Shrink Discs®

With half shrink discs® HC/HT only 50% of stated T is transmitted.

type H**T** (**T**hreaded holes in thrust ring)

type H**C** (**C**learance holes in thrust ring)

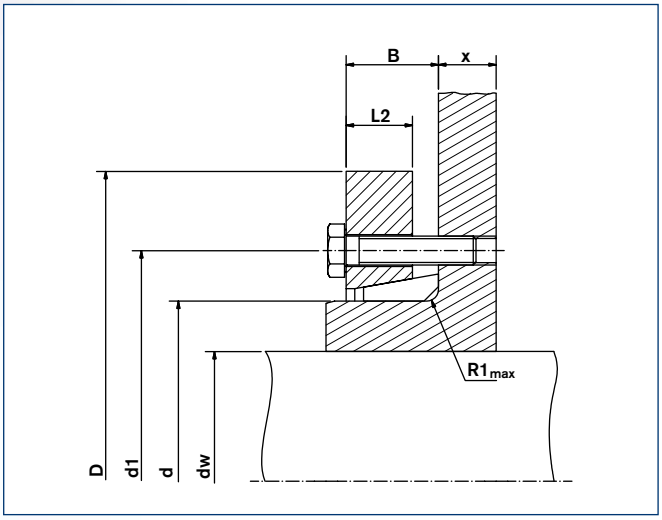

Shrink Disc® RINGFEDER® RfN 4091 HC · Dimensions

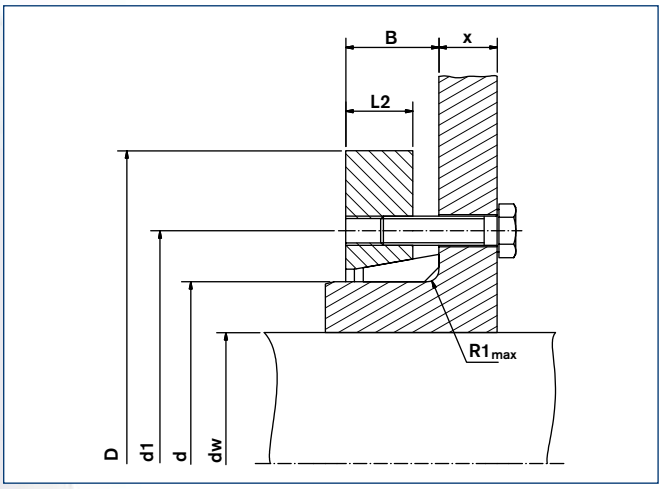

Shrink Disc® RINGFEDER® RfN 4091 HT

Size	d_w	Cw	d	Ch	D	D_1	B±0.039	R1 max.	T_A	Transmissible torques or axial forces T	Transmissible torques or axial forces F_{ax}	Locking screws DIN EN ISO 4014-10.9 Quantity	Locking screws DIN EN ISO 4014-10.9 Thread	Weight WT
	Inch	Inch	Inch	Inch	Inch	Inch	Inch	Inch	lb-ft	lb-ft	lbs	n		lbs
50	1.496 1.654	0.0013	1.969	+0 -0.0015	3.740	2.874	0.906	0.071	18	1328 1770	23829 27875	7	M8	3.1
55	1.654 1.890		2.165	+0 -0.0018	4.134	3.071	0.906	0.071	21	1660 2360	27426 33270	7	M8	3.7
62	1.890 2.047		2.441		4.528	3.346	0.906	0.071	22	2176 2655	30123 32596	7	M8	4.4
68	1.969 2.283	0.0019	2.677		4.724	3.622	0.906	0.071	22	2360 3835	32596 40914	8	M8	4.6
75	2.165 2.559		2.953		5.709	4.134	1.063	0.110	44	3172 516	43386 55975	7	M10	8.4
80	2.362 2.756		3.150		5.709	4.134	1.063	0.110	44	4204 6196	44960 56874	7	M10	7.9
90	2.559 2.953		3.543	+0 -0.0021	6.299	4.567	1.142	0.110	44	4942 7081	48782 60471	8	M10	11
100	2.756 3.150		3.937		6.693	4.961	1.260	0.130	44	6491 8998	59572 72161	10	M10	12
110	2.953 3.346		4.331		7.283	5.433	1.378	0.130	44	8113 10842	69238 79130	12	M10	17
125	3.346 3.740	0.0027	4.921	+0 -0.0025	8.465	6.299	1.476	0.130	74	11063 14751	79804 94866	10	M12	24
135	3.543 4.134		5.315		8.346	6.693	1.772	0.189	74	12391 18365	94416 119144	12	M12	23
140	3.740 4.134		5.512		9.055	6.890	1.654	0.189	74	15194 19545	97338 112400	12	M12	29
140	3.543 4.331		5.512		11.969	7.283	2.126	0.189	184	29355 46909	198948 258520	12	M16	77
155	4.134 4.528		6.102		10.354	7.795	1.772	0.189	74	19914 25077	122741 140275	15	M12	43
165	4.528 4.921		6.496		11.417	8.268	1.929	0.189	184	30240 37394	166352 183212	10	M16	57
175	4.921 5.315	0.0031	6.890		11.811	8.661	1.929	0.189	184	34665 42041	168600 188832	10	M16	64
175	4.921 5.315		6.890		11.811	9.252	2.323	0.189	184	51629 62693	260768 289992	15	M16	81
185	5.315 5.709		7.283	+0 -0.0028	12.992	9.291	2.402	0.189	184	53104 70806	247280 269760	14	M16	104
190	5.315 6.102		7.480		13.780	9.843	2.441	0.189	347	66602 91457	316743 378788	12	M20	115
195	5.512 6.102		7.677		13.780	9.685	2.500	0.189	184	55317 70806	241660 277628	14	M16	117

To continue see next page

RfN 4091
split

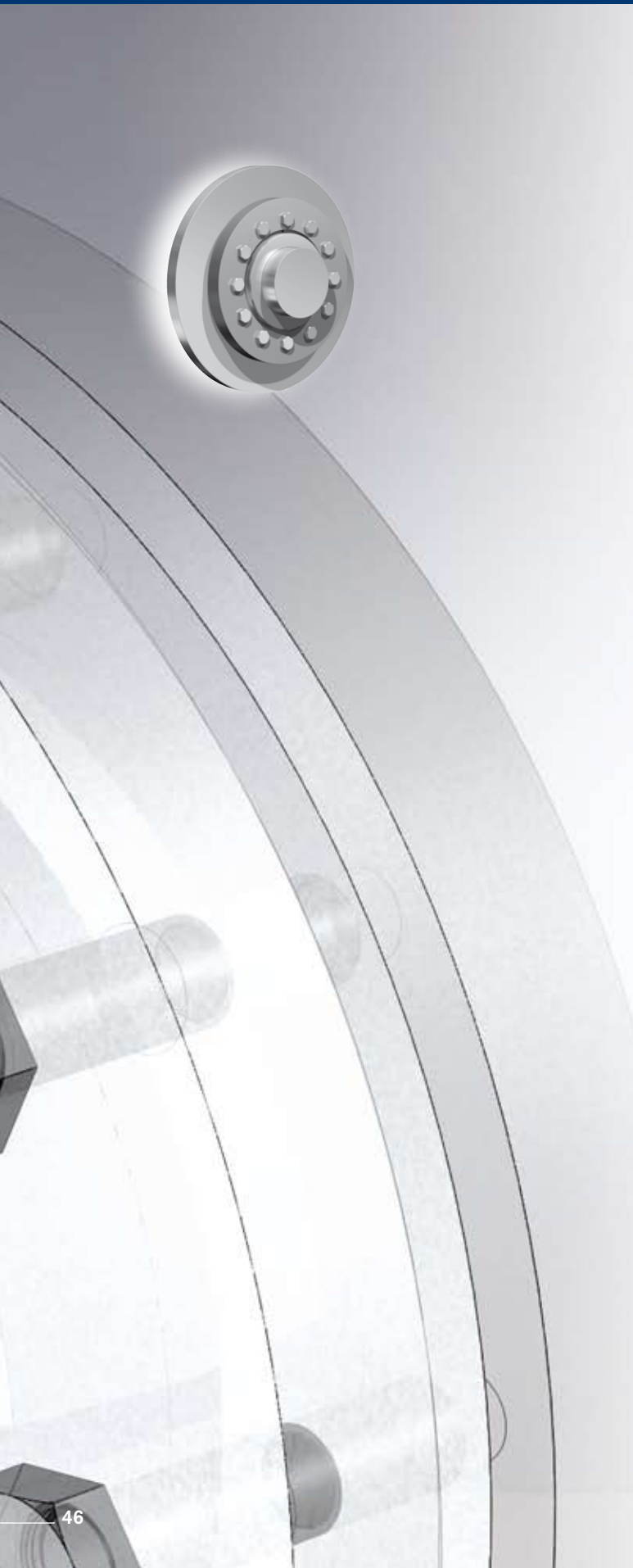

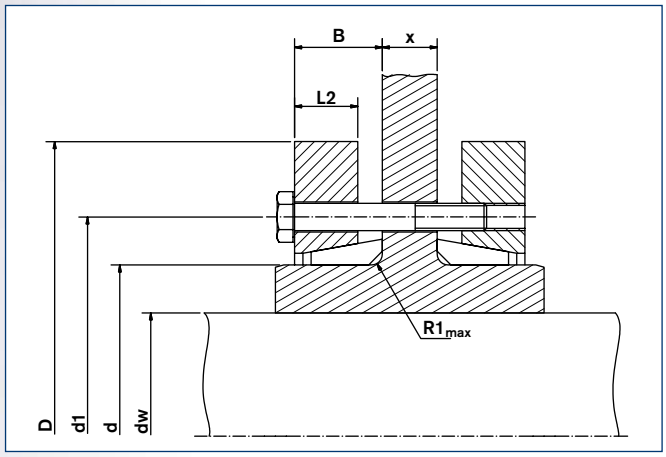

Shrink Disc® RINGFEDER® RfN 4091 · Location

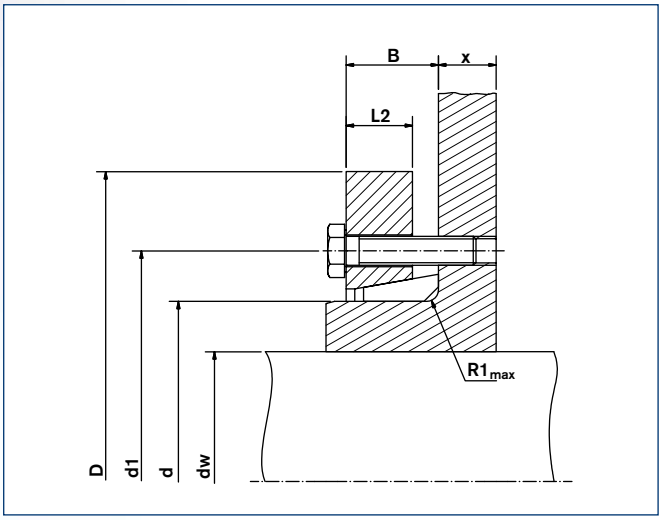

Shrink Disc® RINGFEDER® RfN 4091 HC · Dimensions

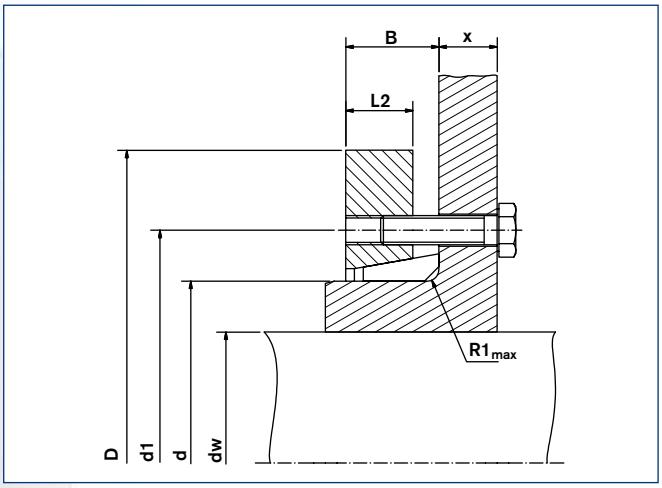

Shrink Disc® RINGFEDER® RfN 4091 HT

Size	d_w	Cw	d	Ch	D	D_1	B±0.039	R1 max.	T_A	Transmissible torques or axial forces T	Transmissible torques or axial forces F_{ax}	Locking screws DIN EN ISO 4014-10.9 Quantity	Locking screws DIN EN ISO 4014-10.9 Thread	Weight WT
	Inch	Inch	Inch	Inch	Inch	Inch	Inch	Inch	lb-ft	lb-ft	lbs	n		lbs
200	5.709 6.102	0.0031	7.874	+0 -0.0028	13.780	9.685	2.500	0.189	184	62693 73756	263016 289992	15	M16	110
220	6.299 6.693		8.661		14.567	10.630	2.933	0.252	184	93670 108053	357432 386656	20	M16	143
240	6.693 7.480		9.449		15.945	11.614	3.130	0.252	361	114322 146037	409136 467584	15	M20	192
260	7.480 8.268	0.0035	10.236	+0 -0.0032	16.929	12.638	3.445	0.252	361	157100 197666	508048 579984	18	M20	221
280	8.268 9.055		11.024		18.110	13.622	3.780	0.331	361	210205 261834	615952 694632	21	M20	291
300	9.055 9.646		11.811		19.094	14.331	3.858	0.331	361	251508 290599	665408 722732	22	M20	309
320	9.449 10.236		12.598	+0 -0.0035	20.472	15.197	4.016	0.331	361	278798 332640	708120 780056	24	M20	364
340	9.843 10.630	0.0400	13.386		22.441	16.535	4.331	0.331	620	361036 426310	878968 961020	21	M24	529
350	10.630 11.220		13.780		22.835	16.732	4.331	0.331	620	410083 463925	926626 992492	21	M24	545
360	11.024 11.614		14.173		23.228	17.008	4.508	0.390	620	451387 508179	982376 1049816	22	M24	551
380	11.417 12.205		14.961		25.394	18.031	4.508	0.390	620	455812 530306	959896 1044196	22	M24	706
390	11.811 12.598		15.354		25.984	18.425	4.665	0.390	620	522192 600743	1059932 1144232	24	M24	772
400	12.402 12.992	0.0044	15.748		26.772	18.898	4.665	0.390	620	564233 623238	1091404 1152100	24	M24	816
420	12.992 13.780		16.535	+0 -0.0038	27.165	19.843	5.177	0.390	620	736822 840818	1361164 1464572	30	M24	904
440	13.386 14.173		17.323		29.528	20.748	5.453	0.390	922	780338 888022	1400504 1503912	24	M27	1191
460	14.173 14.961		18.110		30.315	21.535	5.551	0.488	922	973579 1106340	1672512 1787160	28	M27	1191
480	14.961 15.748		18.898		31.496	22.835	5.984	0.488	922	1132155 1268603	1816384 1933280	30	M27	1433
500	15.748 16.535	0.0048	19.685		33.465	23.622	5.984	0.488	922	1290730 1430866	1967000 2079400	32	M27	1654

RfN 4161

Standard Series

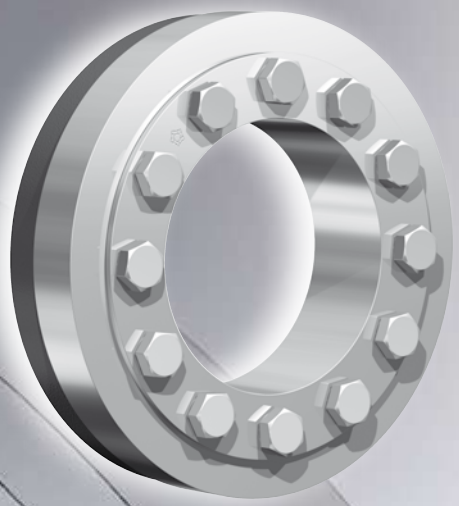

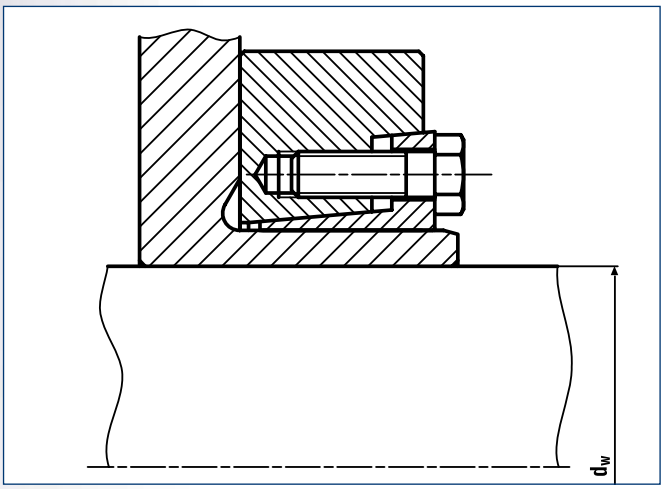

Shrink Disc® RINGFEDER® RfN 4161 · Location

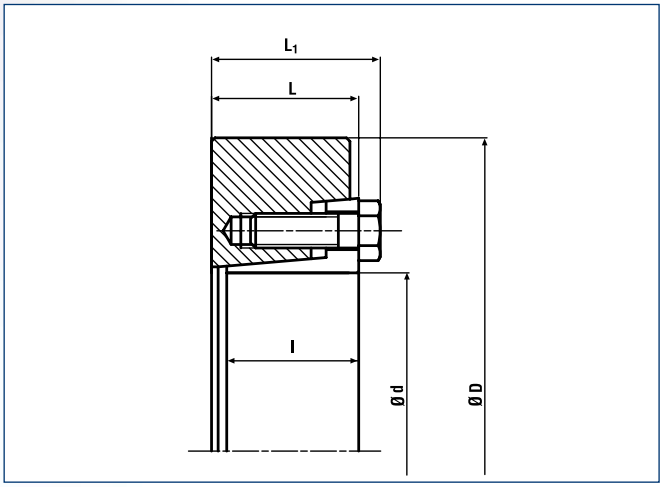

Shrink Disc® RINGFEDER® RfN 4161 · Dimensions

Size	Shrink Disc® dimensions									Transmissible torques or axial forces			Weight	
	d_w	Cw	d	Ch	D	L_1	L	l	T_A	T	F_{ax}	Thread	WT	T_{max}
	mm	Inch	Inch	Inch	Inch	Inch	Inch	Inch	lb-ft	lb-ft	lbs		lbs	lb-ft
18	0.591 0.630	+0 -0.0013	0.71	0.0010	1.73	0.75	0.59	0.53	9	59 81	2473 3147	M6	0.2	89
20	0.669 0.709		0.79		1.85	0.75	0.59	0.53	9	111 133	4047 4496	M6	0.2	122 146
24	0.748 0.866		0.94		1.97	0.87	0.71	0.59	9	122 218	3822 6070	M6	0.4	134 239
26	0.787 0.945		1.02		2.03	0.87	0.71	0.59	9	170 258	5171 6520	M6	0.4	187 284
30	0.945 1.024		1.18		2.36	0.94	0.79	0.67	9	273 347	6969 8094	M6	0.7	300 381
36	1.063 1.299	+0 -0.0015	1.42	0.0020	2.83	1.08	0.87	0.75	22	354 634	8094 11691	M8	1.1	389 698
38	1.063 1.299		1.50		2.83	1.08	0.87	0.75	22	354 634	8094 11691	M8	1.1	389 698
40	1.339 1.457		1.57		3.15	1.16	0.94	0.81	22	597 708	10791 11691	M8	1.3	657 779
44	1.378 1.457		1.73		3.15	1.16	0.94	0.81	22	597 708	10342 11691	M8	1.3	657 779
50	1.496 1.654		1.97		3.54	1.24	1.02	0.87	22	848 1121	13714 16187	M8	1.8	933 1233
55	1.654 1.890	+0 -0.0018	2.17		3.94	1.36	1.14	0.96	22	959 1402	13939 17761	M8	2.4	1055 1542
60	1.890 2.047		2.36		4.33	1.36	1.14	0.96	22	1254 1593	15962 18660	M8	2.9	1379 1753
62	1.890 2.047		2.44		4.33	1.36	1.14	0.96	22	1254 1593	15962 18660	M8	2.9	1379 1753
68	1.969 2.362		2.68	0.0023	4.53	1.38	1.16	0.96	22	1402 2324	17086 23606	M8	2.9	1542 2556
75	2.165 2.559		2.95		5.43	1.50	1.22	0.98	44	1992 3024	22032 28327	M10	5.1	2191 3327
80	2.362 2.756		3.15		5.55	1.50	1.22	0.98	44	2434 3651	24730 31700	M10	5.1	2678 4016
85	2.559 2.953	+0 -0.0021	3.35		6.10	1.77	1.50	1.34	44	4057 5827	37995 47437	M10	7.1	4463 6410
90	2.559 2.953		3.54		6.10	1.77	1.50	1.24	44	4057 5827	37995 47437	M10	7.1	4463 6410
95	2.756 3.150		3.74		6.69	1.99	1.71	1.44	44	4573 6344	39793 48336	M10	9.5	5031 6978
100	2.756 3.150		3.94		6.69	1.99	1.71	1.44	44	7745 10106	39793 48336	M10	9.5	5031 6978

To continue see next page

RfN 4161
Standard Series

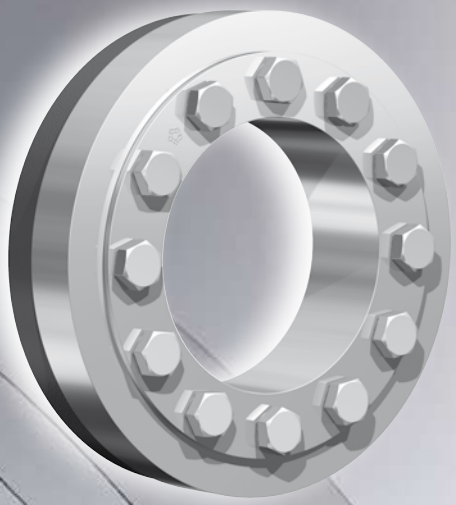

Characteristics

Standard series – this range is the most popular, being used in most applications. High transmission values are possible, and by varying the screw tightening torque the Shrink Disc® can be adapted to the design specification.

Simplified manufacture – only plain shaft and bore diameters with easily achieved surface finish and tolerances are required.

Easy adjustability – No stops, steps, keyways, splines etc. are required, therefore hubs can be located and locked at any point or angle on the shaft.

Easy mounting – RINGFEDER® Shrink Discs® use standard screws and tightened using standard tools. No additional machining or fitting work is required.

Easy removal – after loosening the locking screws, the RINGFEDER® Shrink Disc® will self release and the hub will move freely on the shaft.

Low susceptibility to contamination – when the locking screws are tightened the contact (functional) surfaces are pressed firmly together and contamination by dirt and moisture.

Size	Shrink Disc® dimensions									Transmissible torques or axial forces			Weight	
	d_w	Cw	d	Ch	D	L_1	L	l	T_A	T	F_{ax}	Thread	WT	T_{max}
	Inch	Inch	Inch	Inch	Inch	Inch	Inch	Inch	lb-ft	lb-ft	lbs		lbs	lb-ft
105	3.150 3.543	+0 -0.0021	4.13	0.0027	7.28	2.24	1.93	1.59	74	7745 10106	59128 68345	M12	13	8520 11116
110	3.150 3.543		4.33		7.28	2.24	1.93	1.59	74	7745 10106	59128 68345	M12	13	8520 11116
115	3.346 3.740	+0 -0.0025	4.53	0.0027	7.76	2.40	2.09	1.77	74	9220 11802	59128 68345	M12	15	10142 12982
120	3.346 3.740		4.72		7.76	2.40	2.09	1.77	74	9220 11802	66097 75764	M12	15	10142 12982
125	3.543 3.937		4.92		8.46	2.42	2.11	1.77	74	10696 13868	72392 84532	M12	19	11765 15254
130	3.740 4.331		5.12		9.06	2.62	2.26	1.85	118	13572 19326	87005 107014	M14	24	14930 21259
135	3.740 4.331		5.31		9.06	2.62	2.26	1.85	118	13572 19326	87005 107014	M14	24	14930 21259
140	3.937 4.528		5.51		9.06	2.64	2.28	1.85	118	14679 20506	89478 108588	M14	23	16147 22557
150	4.331 4.921		5.91		10.35	2.83	2.48	2.01	118	19916 26702	110387 130171	M14	34	21908 29373
155	4.331 4.921		6.10		10.35	2.83	2.48	2.01	118	19916 26702	110387 130171	M14	34	21908 29373
160	4.724 5.315		6.30	0.0031	11.42	3.11	2.68	2.20	184	28768 37619	146133 169964	M16	47	31645 41381
165	4.724 5.315		6.50		11.42	3.11	2.68	2.20	184	28768 37619	146133 169964	M16	47	31645 41381
170	5.118 5.709		6.69		11.81	3.15	2.72	2.20	184	34300 43520	160746 183004	M16	50	37730 47873
175	5.118 5.709		6.89		11.81	3.15	2.72	2.20	184	34300 43520	160746 183004	M16	50	37730 47873
180	5.512 6.102	+0 -0.0028	7.09		12.60	3.80	3.37	2.81	184	48684 61224	212005 240782	M16	72	53552 67346
185	5.512 6.102		7.28		12.60	3.80	3.37	2.81	184	48684 61224	212005 240782	M16	72	53552 67346
190	5.906 6.496		7.48		13.39	3.80	3.37	2.81	184	60486 75239	245728 277878	M16	82	66535 82763
195	5.906 6.496		7.68		13.39	3.80	3.37	2.81	184	60486 75239	245728 277878	M16	80	66535 82763
200	5.906 6.496		7.87		13.39	3.80	3.37	2.81	184	60486 75239	245728 277878	M16	80	66535 82763

RfN 4171
Standard Series

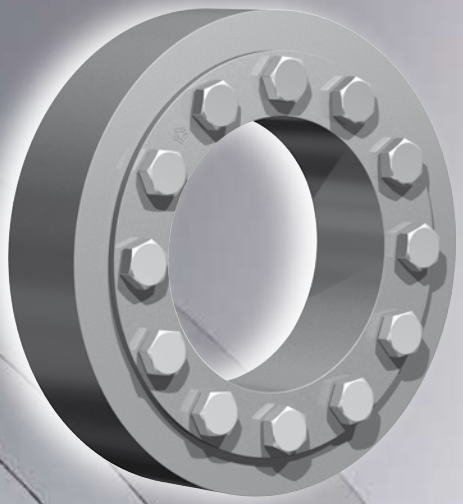

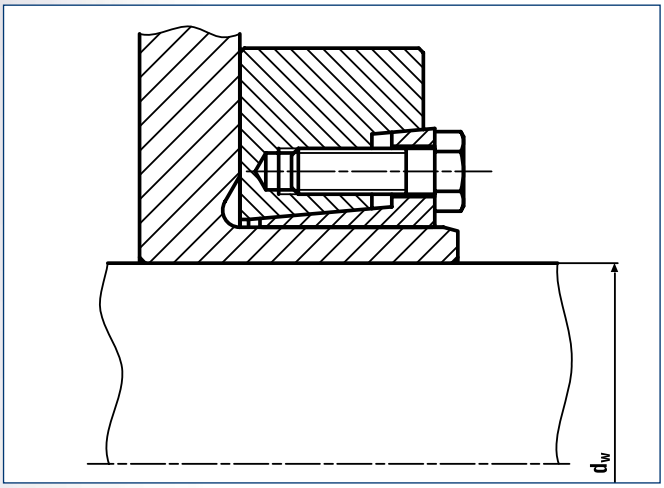

Shrink Disc® RINGFEDER® RfN 4171 · Location

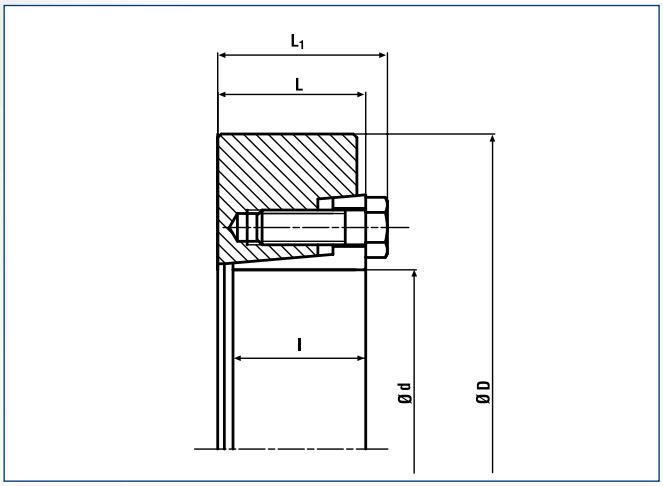

Shrink Disc® RINGFEDER® RfN 4171 · Dimensions

Wind turbine

Shrink Disk dimensions							Transmissible torques or axial forces		Locking screws 12.9	Weight	
d	dw	D	L_1	L	l	T_A	T	F_{ax}		WT	T_{max}
mm	Inch					lb-ft	lb-ft	lbs		lbs	lb-ft
18	0.591 0.630	1.73	0.75	0.59	0.53	9	59 81	2398 3091	M6	0.2	65 89
20	0.669 0.709	1.85	0.75	0.59	0.53	9	111 133	3968 4497	M6	0.2	122 146
24	0.748 0.866	1.97	0.87	0.71	0.59	9	122 218	3905 6030	M6	0.4	134 239
26	0.787 0.945	2.03	0.87	0.71	0.59	9	170 258	5171 6558	M6	0.4	187 284
30	0.945 1.024	2.36	0.94	0.79	0.67	9	273 347	6932 8129	M6	0.7	300 381
36	1.063 1.299	2.83	1.08	0.87	0.75	22	354 634	7994 11718	M8	1.1	389 698
38	1.063 1.299	2.83	1.08	0.87	0.75	22	354 634	7994 11718	M8	1.1	389 698
40	1.339 1.457	3.15	1.16	0.94	0.81	22	597 708	10713 11667	M8	1.3	657 779
44	1.378 1.457	3.15	1.16	0.94	0.81	22	597 708	10406 11667	M8	1.3	657 779
50	1.496 1.654	3.54	1.24	1.02	0.87	22	848 1121	13608 16273	M8	1.8	933 1233
55	1.654 1.890	3.94	1.36	1.14	0.96	22	959 1402	13918 17799	M8	2.4	1055 1542
60	1.890 2.047	4.33	1.36	1.14	0.96	22	1254 1593	15926 18678	M8	2.9	1379 1753
62	1.890 2.047	4.33	1.36	1.14	0.96	22	1254 1593	15926 18678	M8	2.9	1379 1753
68	1.969 2.362	4.53	1.38	1.16	0.96	22	1402 2324	17087 23607	M8	2.9	1542 2556
75	2.165 2.559	5.43	1.50	1.22	0.98	44	1992 3024	22074 28363	M10	5.1	2191 3327
80	2.362 2.756	5.55	1.50	1.22	0.98	44	2434 3651	24731 31798	M10	5.1	2678 4016
85	2.559 2.953	6.10	1.77	1.50	1.34	44	4057 5827	38048 47364	M10	7.1	4463 6410
90	2.559 2.953	6.10	1.77	1.50	1.24	44	4057 5827	38048 47364	M10	7.1	4463 6410
95	2.756 3.150	6.69	1.99	1.71	1.44	44	4573 6344	39827 48339	M10	9.5	5031 6978
100	2.756 3.150	6.69	1.99	1.71	1.44	44	4573 6344	39827 48339	M10	9.5	5031 6978
105	3.150 3.543	7.28	2.24	1.93	1.59	74	7745 10106	59018 68449	M12	12.8	8520 11116
110	3.150 3.543	7.28	2.24	1.93	1.59	74	7745 10106	59018 68449	M12	12.8	8520 11116
115	3.346 3.740	7.76	2.40	2.09	1.77	74	9220 11802	66127 75733	M12	15.2	10142 12982
120	3.346 3.740	7.76	2.40	2.09	1.77	74	9220 11802	66127 75733	M12	15.2	10142 12982
125	3.543 3.937	8.46	2.42	2.11	1.77	74	10696 13868	72446 84536	M12	19.2	11765 15254
130	3.740 4.331	9.06	2.62	2.26	1.85	118	13572 19326	87092 107101	M14	23.8	14930 21259
135	3.740 4.331	9.06	2.62	2.26	1.85	118	13572 19326	87092 107101	M14	23.8	14930 21259
140	3.937 4.528	9.06	2.64	2.28	1.85	118	14679 20506	89483 108701	M14	22.7	16147 22557

To continue see next page

RfN 4171

Standard Series

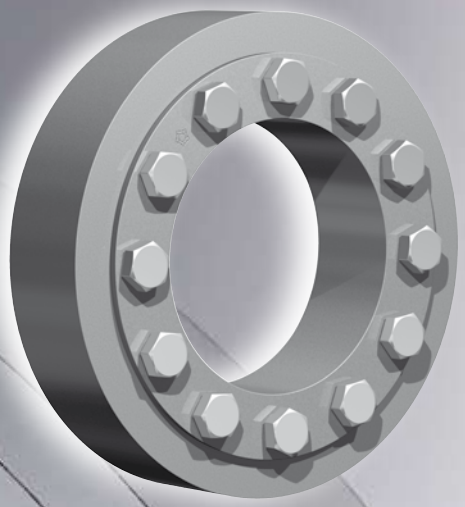

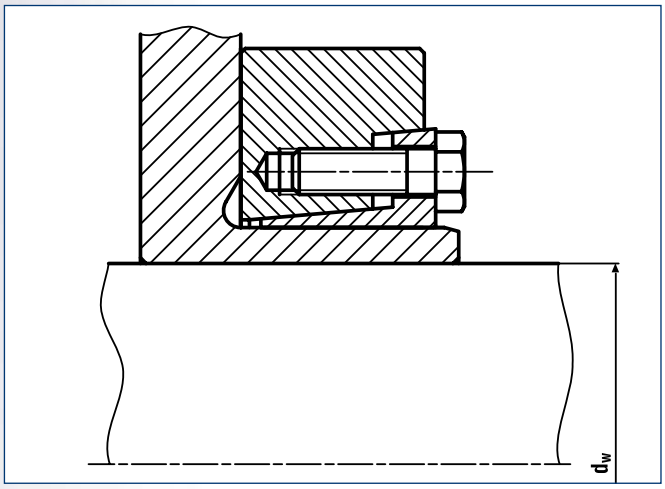

Shrink Disc® RINGFEDER® RfN 4171 · Location

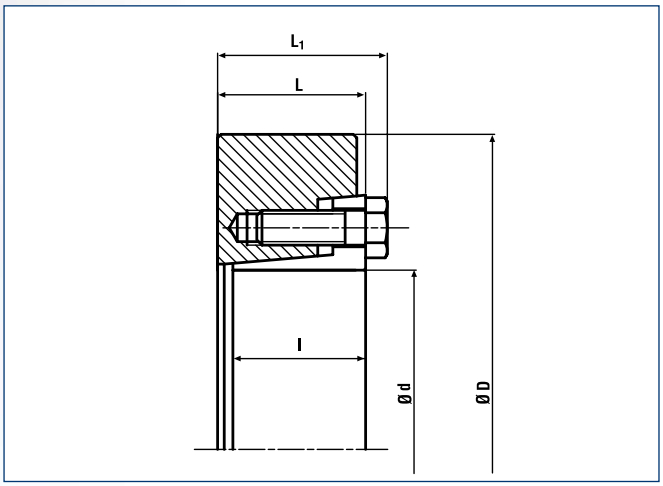

Shrink Disc® RINGFEDER® RfN 4171 · Dimensions

Shrink Disk dimensions							Transmissible torques or axial forces		Locking screws 12.9	Weight	
d	dw	D	L_1	L	l	T_A	T	F_{ax}		WT	T_{max}
mm	Inch					lb-ft	lb-ft	lbs		lbs	lb-ft
150	4.331 4.921	10.35	2.83	2.48	2.01	118	19916 26702	110372 130222	M14	33.5	21908 29373
155	4.331 4.921	10.35	2.83	2.48	2.01	118	19916 26702	110372 130222	M14	33.5	21908 29373
160	4.724 5.315	11.42	3.11	2.68	2.20	184	28768 37619	146140 169872	M16	47.4	31645 41381
165	4.724 5.315	11.42	3.11	2.68	2.20	184	28768 37619	146140 169872	M16	47.4	31645 41381
170	5.118 5.709	11.81	3.15	2.72	2.20	184	34300 43520	160841 182966	M16	49.6	37730 47873
175	5.118 5.709	11.81	3.15	2.72	2.20	184	34300 43520	160841 182966	M16	49.6	37730 47873
180	5.512 6.102	12.60	3.80	3.37	2.81	184	48684 61224	211984 240787	M16	72	53552 67346
185	5.512 6.102	12.60	3.80	3.37	2.81	184	48684 61224	211984 240787	M16	72	53552 67346
190	5.906 6.496	13.39	3.80	3.37	2.81	184	60486 75239	245815 277973	M16	82	66535 82763
195	5.906 6.496	13.39	3.80	3.37	2.81	184	60486 75239	245815 277973	M16	80	66535 82763
200	5.906 6.496	13.39	3.80	3.37	2.81	184	60486 75239	245815 277973	M16	80	66535 82763
220	6.299 7.087	14.57	4.65	4.13	3.46	354	77452 101794	295091 344741	M20	117	85197 111973
240	6.693 7.874	15.94	4.80	4.29	3.62	354	92204 134250	330634 409193	M20	146	101425 147675
260	7.480 8.661	16.93	5.24	4.72	4.06	354	121710 175557	390496 486453	M20	181	133881 193113
280	8.268 9.449	18.11	5.83	5.31	4.49	354	162280 221290	471075 562078	M20	227	178508 243420
300	8.661 9.843	19.09	6.18	5.59	4.80	627	202850 269237	562078 656507	M24	265	223135 296160
320	9.449 10.630	20.47	6.18	5.59	4.80	627	224979 295054	571446 666166	M24	304	247477 324559
340	9.843 11.024	22.44	6.73	6.14	5.28	627	287678 376194	701473 819028	M24	417	316445 413813
350	10.630 11.417	22.83	7.01	6.42	5.51	627	365129 431516	824381 907077	M24	445	401642 474668
360	10.630 11.811	23.23	7.09	6.50	5.51	627	368817 468398	832708 951785	M24	456	405699 515238
380	11.417 12.205	25.20	7.20	6.50	5.67	922	435205 505280	914830 993608	M27	538	478725 555808
390	11.417 12.598	25.59	7.24	6.57	5.67	922	479463 590108	1007864 1124156	M27	549	527409 649119
400	12.598 13.780	25.98	7.99	7.32	6.54	922	547325 672723	1042654 1171691	M27	628	602058 739995
420	12.598 13.780	26.38	7.99	7.32	6.54	922	547325 672723	1042654 1171691	M27	628	602058 739995
440	13.386 14.567	29.13	8.31	7.64	6.85	922	697065 843117	1249796 1389092	M27	867	766771 927428
460	14.173 15.354	30.31	8.31	7.64	6.85	922	814349 973678	1378964 1521934	M27	924	895784 1071046
480	15.748 16.929	31.50	9.13	8.39	7.52	922	958925 1136695	1461402 1611464	M30	1085	1054818 1250365
500	16.929 18.110	33.46	9.13	8.39	7.52	922	1103502 1297500	1564406 1719469	M30	1250	1213852 1427250

RfN 4181

Heavy Duty Series

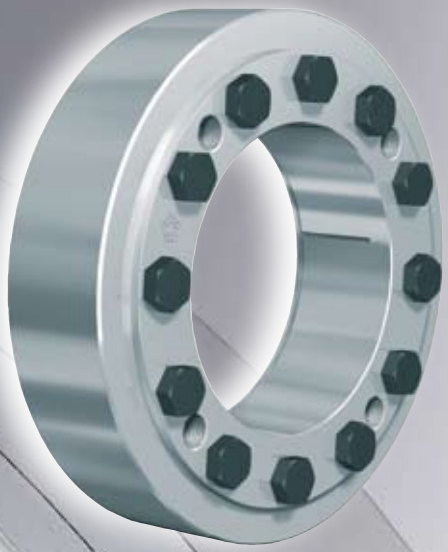

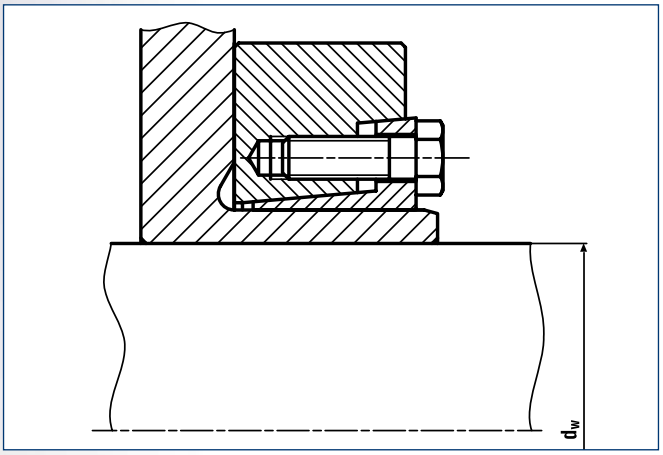

Shrink Disc® RINGFEDER® RfN 4181 · Location

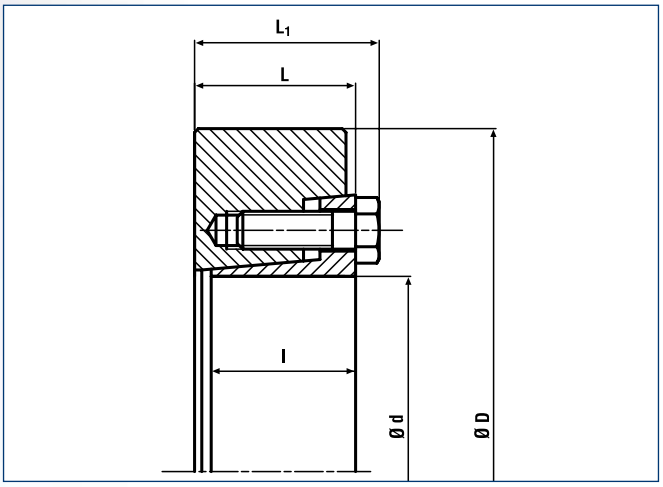

Shrink Disc® RINGFEDER® RfN 4181 · Dimensions

Wind turbine

Shrink Disk dimensions							Transmissible torques or axial forces		Locking screws 12.9	Weight	
d	dw	D	L_1	L	l	T_A	T	F_{ax}		WT	T_{max}
mm	Inch					lb-ft	lb-ft	lbs		lbs	lb-ft
50	1.496 1.654	3.54	1.24	1.02	0.87	26	1180 1475	18933 21412	M8	1.8	1298 1623
55	1.654 1.890	3.94	1.36	1.14	0.96	26	1254 1844	18201 23420	M8	2.4	1379 2028
60	1.890 2.047	4.33	1.36	1.14	0.96	26	1697 2139	21546 25077	M8	2.9	1866 2353
62	1.890 2.047	4.33	1.36	1.14	0.96	26	1697 2139	21546 25077	M8	2.9	1866 2353
68	1.969 2.362	4.53	1.38	1.16	0.96	26	1770 2951	21584 29977	M8	2.9	1947 3246
75	2.165 2.559	5.43	1.50	1.22	0.98	52	2803 4426	31068 41507	M10	5.1	3083 4868
80	2.362 2.756	5.55	1.50	1.22	0.98	52	3172 4795	32226 41754	M10	5.1	3489 5274
85	2.559 2.953	6.10	1.77	1.50	1.24	52	4426 6344	41507 51561	M10	7.1	4868 6978
90	2.559 2.953	6.10	1.77	1.50	1.24	52	4426 6344	41507 51561	M10	7.1	4868 6978
95	2.756 3.150	6.69	1.99	1.71	1.44	52	5532 7819	48178 59580	M10	9.5	6085 8601
100	2.756 3.150	6.69	1.99	1.71	1.44	52	5532 7819	48178 59580	M10	9.5	6085 8601
105	3.150 3.543	7.28	2.24	1.93	1.59	89	9442 12540	71946 84936	M12	12.8	10386 13794
110	3.150 3.543	7.28	2.24	1.93	1.59	89	9442 12540	71946 84936	M12	12.8	10386 13794
115	3.346 3.740	7.76	2.40	2.09	1.77	89	10106 13425	72475 86146	M12	15.2	11116 14767
120	3.346 3.740	7.76	2.40	2.09	1.77	89	10106 13425	72475 86146	M12	15.2	11116 14767
125	3.543 3.937	8.46	2.42	2.11	1.77	89	12245 15859	82938 96677	M12	19.2	13469 17445
130	3.740 4.331	9.06	2.62	2.26	1.85	140	15122 21760	97032 120591	M14	23.8	16634 23936
135	3.740 4.331	9.06	2.62	2.26	1.85	140	15122 21760	97032 120591	M14	23.8	16634 23936
140	3.937 4.528	9.06	2.64	2.28	1.85	140	17334 23973	105671 127078	M14	22.7	19068 26370
150	4.331 4.921	10.35	2.83	2.48	2.01	140	23235 31718	128767 154684	M14	33.5	25559 34890
155	4.331 4.921	10.35	2.83	2.48	2.01	140	23235 31718	128767 154684	M14	33.5	25559 34890
160	4.724 5.315	11.42	3.11	2.68	2.20	214	33194 43520	168623 196519	M16	47.4	36513 47873
165	4.724 5.315	11.42	3.11	2.68	2.20	214	33194 43520	168623 196519	M16	47.4	36513 47873
170	5.118 5.709	11.81	3.15	2.72	2.20	214	40570 52372	190242 220179	M16	49.6	44627 57609
175	5.118 5.709	11.81	3.15	2.72	2.20	214	40570 52372	190242 220179	M16	49.6	44627 57609
180	5.512 6.102	12.60	3.80	3.37	2.81	214	59748 74501	260162 293006	M16	72	65723 81951
185	5.512 6.102	12.60	3.80	3.37	2.81	214	59748 74501	260162 293006	M16	72	65723 81951
190	5.906 6.496	13.39	3.80	3.37	2.81	214	71551 88516	290782 327027	M16	80	78706 97368

To continue see next page

RfN 4181

Heavy Duty Series

Characteristics

Two part Shrink Disc® heavy duty series – with additional guide mechanism for the inner ring. For the transmission of maximum torques.

Highest reliability – applicable for static, dynamic and impact loads.

Simplified manufacture – only plain shaft and bore diameters with easily achieved surface finish and tolerances are required.

Fully replaceable – the RINGFEDER® Shrink Discs® work without any positive locking.

Visual check of the tightening status – minimizing installation errors during assembly.

Easy mounting – RINGFEDER® Shrink Discs® use standard screws and tightened using standard tools. No additional machining or fitting work is required.

Short assembly times – cost savings particularly in the case of quantity production.

Low susceptibility to contamination – when the locking screws are tightened the contact (functional) surfaces are pressed firmly together and prevent contamination by dirt and moisture.

Easy adjustability – No stops, steps, key-ways, splines etc. are required therefore, hubs can be located and locked at any point or angle on the shaft.

Shrink Disk dimensions							Transmissible torques or axial forces		Locking screws 12.9	Weight	
d	dw	D	L_1	L	l	T_A	T	F_{ax}		WT	T_{max}
mm	Inch					lb-ft	lb-ft	lbs		lbs	lb-ft
195	5.906 6.496	13.39	3.80	3.37	2.81	214	71551 88516	290782 327027	M16	80	78706 97368
200	5.906 6.496	13.39	3.80	3.37	2.81	214	71551 88516	290782 327027	M16	80	78706 97368
220	6.299 7.087	14.57	4.65	4.13	3.46	420	95893 125398	365351 424681	M20	117	105482 137938
240	6.693 7.874	15.94	4.80	4.29	3.62	420	112121 161542	402051 492380	M20	146	123333 177696
260	7.480 8.661	16.93	5.24	4.72	4.06	420	158592 221290	508828 613176	M20	181	174451 243420
280	8.268 9.449	18.11	5.83	5.31	4.49	420	208013 280301	603832 711965	M20	227	228814 308331
300	8.661 9.843	19.09	6.18	5.59	4.80	738	250796 324559	694933 791406	M24	265	275875 357015
320	9.449 10.630	20.47	6.18	5.59	4.80	738	302430 390946	768173 882670	M24	304	332673 430041
340	9.843 11.024	22.44	6.73	6.14	5.28	738	383570 486839	935297 1059918	M24	417	421927 535523
350	10.630 11.417	22.83	7.01	6.42	5.51	738	435205 516344	982595 1085392	M24	417	478725 567979
360	10.630 11.811	23.23	7.09	6.50	5.51	738	464710 590108	1049212 1199099	M24	456	511181 649119
380	11.417 12.205	25.20	7.17	6.50	5.67	1070	516344 612237	1085392 1203934	M27	518	567979 673461
390	11.417 12.598	25.59	7.24	6.57	5.67	1070	582732 722882	1224942 1377091	M27	549	641005 795170
400	11.811 12.598	25.98	7.99	7.32	6.61	1070	590108 663871	1199099 1264675	M27	562	649119 730259
420	12.598 13.780	26.38	7.99	7.32	6.61	1070	714768 872622	1361633 1519858	M27	628	786245 959884
440	13.386 14.567	29.13	8.31	7.64	6.77	1070	894013 1076947	1602914 1774343	M27	867	983415 1184642
460	14.173 15.354	30.31	8.31	7.64	6.77	1070	1027525 1224474	1739943 1913947	M27	924	1130278 1346921
480	14.961 16.142	31.50	9.13	8.39	7.40	1453	1222261 1442814	1960764 2145218	M30	1085	1344487 1587095
500	15.748 16.929	33.46	9.13	8.39	7.40	1453	1391917 1630911	2121282 2312100	M30	1250	1531109 1794002

RINGFEDER® stainless Products

RfN 4071

Standard Series, stainless

Characteristics

Inexpensive manufacture – The large tolerances that are possible and the simple turning process guarantee inexpensive manufacture.

Simple installation – Only a few screws need to be tightened, alignment to precise angles between the hub and shaft is possible in any position, no fitting work is required.

Simple dismantling – Locking Assemblies RINGFEDER® are fitted with threaded extraction holes, so that no additional auxiliary equipment is necessary, series RfN 7012 is self-releasing.

Large constant reverse-torsion fatigue strength – shaft and hub are ungrooved, so that there is no weakening of these components. Shaft and hub can be designed to be considerably smaller (lighter, cost and space-saving design possible).

No danger of deflection – Locking Assemblies RINGFEDER® are absolutely backlash-free.

Effect similar to overload protection – After the set frictional connection force has been exceeded the Locking Assemblies simply slide. Valuable machine parts are protected. The Locking Assemblies are subject to the same laws as any other connection with force transmission by friction - not suitable as sliding clutch.

Completely maintenance-free – no follow-up costs.

Explanations to tables

d, D, L, l, L_1, L_2, d_1 = Basic dimensions

d_W = solid shaft diameter (provided by the customer)

T = transmissible torque

F_{ax} = transmissible axial force

p = approx. surface pressure on the hub extension (diameter d)

T_A = required tightening torque per screw (Screws greased with molykote!)

n = quantity of screws

T_{max} = maximum theoretical transmissible torque

C_W = shaft clearance

Ch = Hub tolerance

σ_v = calculated combined stress in the hub extension (d/dw) under consideration of the tangential, radial and torsional stresses following the equation:

$$\sigma_V = \sqrt{{}^1/_2\,[(\sigma_X - \sigma_y)^2 + (\sigma_y - \sigma_Z)^2 + (\sigma_Z - \sigma_X)^2] + 3\tau^2}$$

Additional loads, e.g. tension, thrust or bending have to be taken into consideration accordingly.

Function values
The functional characteristics are valid with the screw tightening torque listed in the tables and the following assumed conditions:

The locking screws are lubricated using MoS2 (μ_{tot}= 0.1).
The tapered cones are lubricated using MoS_2 (μ = 0.05).
The contact surfaces (d_w) are in lightly oiled condition with coefficient of friction μ = 0.12.

The hub and shaft materials have a modulus of elasticity of 30 x 10^6 PSI. (Lower values result in increased values for T and Fax with reduced tangential stress.)

The maximum clearance is being fully utilized.
The shaft being used is solid, for hollow shaft applications the functional values will change.

In cases where the assumed conditions do not apply then contact our Technical Department where we will be happy to assist you with your application.

RfN 4071

Standard Series stainless

Characteristics

Standard series – this range is the most popular, being used in most applications. High transmission values are possible, and by varying the screw tightening torque the Shrink Disc® can be adapted to the design specification.

Simplified manufacture – only plain shaft and bore diameters with easily achieved surface finish and tolerances are required.

Easy adjustability – No stops, steps, keyways, splines etc. are required, therefore hubs can be located and locked at any point or angle on the shaft.

Easy mounting – RINGFEDER® Shrink Discs® use standard screws and tightened using standard tools. No additional machining or fitting work is required.

Easy removal – after loosening the locking screws, the RINGFEDER® Shrink Disc® will self release and the hub will move freely on the shaft.

Low susceptibility to contamination – when the locking screws are tightened the contact (functional) surfaces are pressed firmly together and prevent contamination by dirt and moisture.

Size	Shrink Disc® dimensions											Transmissible torques or axial forces					Locking screws DIN EN ISO A2-70	Weight	
	d_w	C_w	d	Ch	D	L_1	L	d_1	L_2	l	T_A	T	F_{ax}	P	σ_v	Quantity	Thread	WT	T_{max}
	Inch	Inch	Inch	Inch	Inch	Inch	Inch	Inch	Inch	Inch	lb-ft	lb-ft	lbs	psi		n		lbs	lb-ft
14	0.394 0.472	0.0007	0.551	+0 -0.0013	1.457	0.591	0.472	0.945	0.197	0.354	1.5	16 28	1124 1798	33350	61190 76995	3	M4x10	0.2	20 35
16	0.472 0.551		0.630		1.614	0.728	0.591	1.063	0.246	0.472	3	38 59	2473 3147	36250	62785 99180	3	M5x12	0.2	47 74
18	0.551 0.630		0.709		1.732	0.728	0.591	1.142	0.246	0.472	3	66 95	3597 4496	43065	70035 119190	4	M5x12	0.2	83 119
20	0.591 0.669		0.787		1.811	0.807	0.669	1.260	0.276	0.472	3	87 119	4496 5395	48430	69455 94105	5	M5x15	0.3	109 149
24	0.748 0.827		0.945		1.969	0.906	0.768	1.417	0.315	0.591	3	140 184	5620 6744	38715	63945 91785	6	M5x18	0.4	177 229
30	0.945 1.024		1.181		2.362	0.984	0.846	1.732	0.354	0.669	3	236 295	7643 8542	35090	56115 74240	7	M5x18	0.7	295 369
36	1.024 1.181		1.417	+0 -0.0015	2.835	1.083	0.925	2.047	0.394	0.709	6	243 354	7194 8992	31030	42775 51475	5	M6x20	0.9	302 443
38	1.142 1.220	0.0013	1.496		2.835	1.181	1.024	2.165	0.433	0.827	6	361 413	9442 9442	30160	43645 56985	6	M6x25	1.1	450 509
44	1.260 1.417		1.732		3.150	1.181	1.024	2.402	0.433	0.787	6	391 546	9442 11465	31900	50895 54375	7	M6x25	1.2	487 686
48	1.417 1.575		1.890		3.150	1.181	1.024	2.677	0.433	0.866	6	450 620	9442 11690	26680	44370 48140	7	M6x25	1.2	561 774
50	1.496 1.654		1.969		3.543	1.260	1.102	2.756	0.472	0.866	6	671 878	13488 15736	32915	49590 55825	9	M6x25	1.8	841 1099
55	1.654 1.890		2.165	+0 -0.0018	3.937	1.358	1.201	2.953	0.512	0.906	6	642 937	11690 14837	25375	40745 49155	8	M6x25	2.4	804 1173
62	1.890 2.047		2.441		4.331	1.378	1.220	3.386	0.512	0.906	6	1210 1416	19333 20682	33785	46835 57275	12	M6x30	2.9	1512 1770
68	1.969 2.362		2.677		4.528	1.378	1.220	3.386	0.512	0.906	6	833 1460	12814 11914	25665	44515 59160	10	M6x30	3.1	1040 1829
75	2.165 2.559		2.953		5.433	1.496	1.280	3.937	0.551	0.984	15	1195 1940	16635 22705	26680	43355 47560	7	M8x30	3.7	1497 2427
80	2.362 2.756	0.0019	3.150		5.709	1.496	1.280	3.937	0.551	0.984	15	1364 2124	17310 23154	25085	40600 44950	7	M8x30	4.2	1704 2655
90	2.559 2.953		3.543	+0 -0.0021	6.102	1.752	1.535	4.488	0.669	1.181	15	2058 3046	24054 31022	26535	39875 41905	10	M8x35	7.3	2574 3806
100	2.756 3.150		3.937		6.693	1.949	1.732	4.882	0.748	1.339	15	2552 3666	27650 34844	25230	37265 37845	12	M8x35	10.4	3194 4580
110	2.953 3.346		4.331		7.283	2.244	1.969	5.354	0.866	1.535	30	3201 4492	32596 40239	24215	35090 35235	9	M10x40	13.0	4005 5613
125	3.346 3.740	0.0027	4.921	+0 -0.0025	8.465	2.402	2.126	6.299	0.906	1.654	30	4595 6314	41138 50805	26390	40745 40310	12	M10x40	18.3	5746 7892

More sizes on request

RINGFEDER® Smart-Lock

Smart-Lock-Set RfN 4001

Smart-Lock-Set: the connection of the future

For the perfect hollow shaft connection, the solid shaft is always manufactured to a high degree of precision, normally with a dimensional tolerance of h6/H6. This close tolerance, high-finish shaft is inserted into the equally close tolerance hollow bore of the gearbox and secured in place by the compressive force of the Shrink Disc®. Only by maintaining the strict dimensional tolerances the full torque capacity can be reliability achieved.

Smart-Lock puts an end to all the precision machining involved and guarantees an optimum connection even with clearances up to 0.2 mm (0.008 inches).
The flexibility offered by using interchangeable bushings between the solid shaft and the hollow shaft of the gearbox makes the Smart-Lock-Set an invaluable aid to the marketplace. Thanks to the availability of shaft adapter bushings with various inside diameters, one gearbox can be used with a range of shaft sizes without a change out of the shaft or Shrink Disc®. The ease of selecting and using the Smart-Lock-Set is child´s play.

The Smart-Lock-Set is an efficient design that makes economic sense to the user. Not only can it compensate for larger dimensional tolerances up to 0.2 mm (0.008 inches), it also offers significant cost savings by requiring a minimal number of spare parts needed in inventory. Furthermore, inexpensive, cold drawn, commercial available shafting up to quality grade h11 can be utilized without additional machining. The export market also benefits from using Smart-Lock-Set; adapter bushings in inch size standards are readily available from local inventories for countries that don´t use metric measurements. Expensive specials and large spare part inventories are a thing of the past.

Characteristics

Flexible, cost-saving, easy to maintain: Smart-Lock-Set is the new Shaft/Hollow Shaft connection from RINGFEDER®. Cylindrical Bushings allow the attachment of hollow shaft gear reducers and other hollow shaft connections to any metric and inch size solid shaft diameter.

- **Reliable:**
  Tension-optimized and virtually indestructible Shrink Discs guarantee the highest possible degree of safety
- **Uncompromising:**
  Cylindrical Bushings for a wide range of shaft diameters provide the perfect connection.
- **Economical:**
  The Smart-Lock-Set requires minimal labor at installation and reduces spare part inventory costs up to 70 %.

Technical details of the Smart-Lock-Set

For Gearbox manufacturers:

- Eight standard sizes of adaptor bushings are available for hollow shaft outside diameters from 44 to 90 mm.
- The inside diameters are variable and accommodate the most common metric and inch size shaft sizes.
- Commercially available solid shafting without any machining can be used. Diameters from 25 to 70 mm are possible.

For users of Gearboxes:

- The torque to be transmitted is the criterion used to select the shaft diameter.
- The optimum shaft size for an individual gearbox can be used in connection with the Smart-Lock-Set.
- It is possible to standardize on a certain gearbox size for a range of shaft diameters. The results are lower costs for maintenance and spare parts.

RfN 4001

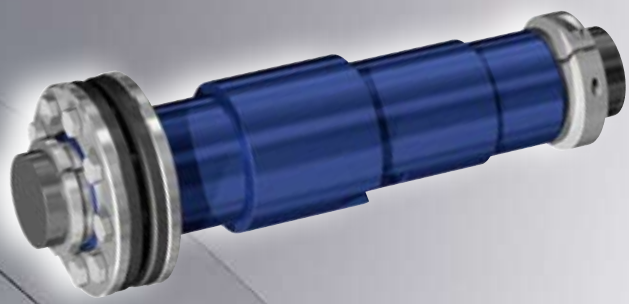

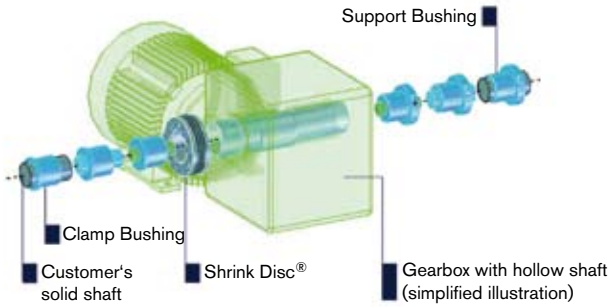

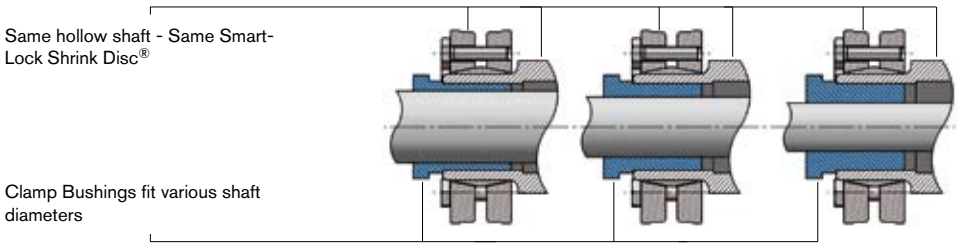

Larger dimensions available upon request. Technical data subject to change without notice. The Smart-Lock-Set is supplied with a RfN 4001 Shrink Disc® only. The bushings are only suitable for one-time use.

Transmissible torque without bushings in presence of d3 and d2 with identical diameter and clearance values as mentioned above, assuming dry contact surfaces.

dimensions											Max. allowable clearance	technical data heat-treated steel					
												Transmissible torque		axial force	screws	tightening torque	Weight
Ød 1	Ød 2	Ød 3	Ød 4	Ød 5	Ød 6	ØD	L1	L2	L3	L4		T	T	F_{ax}	G	T_A	m
mm/	in.	in.	in.	in.	in.	in.	in.	in.	in.	in.	in.	lb.-in.	lb.-ft.	lbs	ISO 4014	lbs-ft	lbs
44 1.732	1 1 1/8 1 3/16 1 1/4	1.417	1.693	1.949	1.496	3.150	1.614	1.220	1.181	0.709	0.005	5222 5841 6019 6196	435 487 502 516	10566	M6	12	0.75
50 1.969	1 3/16 1 1/4 1 3/8 1 7/16	1.654	1.929	2.343	1.732	3.543	1.772	1.339	1.339	0.709	0.006	7612 8054 8851 9205	634 671 738 767	12814	M6	8.85	2.20
55 2.165	1 3/16 1 1/4 1 3/8 1 7/16 1 1/2	1.890	2.126	2.539	1.969	3.937	1.811	1.378	1.378	0.709	0.006	7966 8408 9293 9647 10090	664 701 774 804 841	13489	M6	8.85	2.87
62 2.441	1 3/8 1 7/16 1 1/2 1 5/8 1 3/4	2.047	2.362	2.736	2.126	4.331	1.850	1.417	1.417	0.109	0.006	14869 15622 16285 17613 18941	1239 1302 1357 1468 1578	21806	M6	8.85	3.31
68 2.441	1 5/8 1 3/4 1 15/16 2	2.362	2.638	2.933	2.441	4.528	1.890	1.457	1.457	0.709	0.006 0.007	17879 19295 21357 19560	1490 1608 1780 1630	22031 20008	M6	8.85	3.86
75 2.953	1 15/16 2	2.559	2.874	3.130	2.638	5.433	1.969	1.535	1.535	0.709	0.006 0.007	16374 16462	1364 1372	16861	M8	22.13	5.95
80 3.150	1 15/16 2 2 3/8 2 7/16	2.756	3.071	3.327	2.835	5.709	1.969	1.535	1.535	0.709	0.006 0.007	31155 29384 34872 35846	2596 2449 2906 2987	32148 31923	M8	22.13	6.39
90 3.543	2 3/8 2 7/16 2 3/4	2.953	3.465	3.524	3.031	6.102	2.244	1.811	1.811	0.709	0.007	42041 43192 48679	3503 3599 4057	35520	M8	22.13	8.60

Larger dimensions available upon request. Technical data subject to change without notice. The Smart-Lock-Set is supplied with a RfN 4061 Shrink Disc® only. The bushings are only suitable for one-time use.

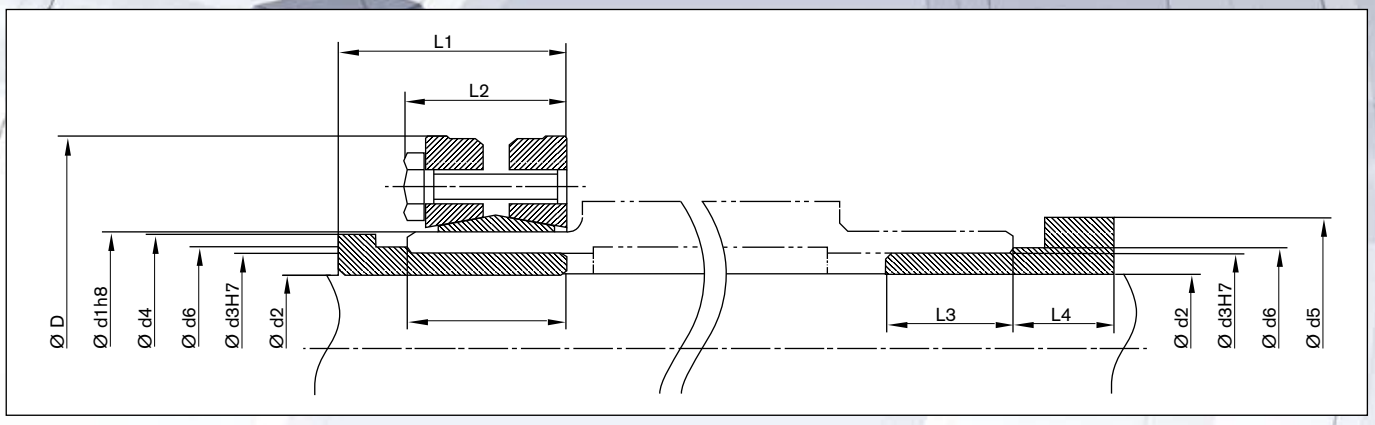

Dimensions S.75

RfN 4001

Shrink Discs®

Clamp bushing

Support bushing

Smart-Lock-Set-Part numbers for metric size spare parts

Shrink Discs®	Ød 1	Ød 2	Ød 3	Clamp bushing	Support bushing
	mm	mm	mm	metric sizes	metric sizes
RfN 4001-44x80	44	25	36	44 K 25/36	44 S 25/36
		28		44 K 28/36	44 S 28/36
		30		44 K 30/36	44 S 30/36
		32		44 K 32/36	44 S 32/36
RfN 4001-50x90	50	30	42	50 K 30/42	50 S 30/42
		32		50 K 32/42	50 S 32/42
		35		50 K 35/42	50 S 35/42
		38		50 K 38/42	50 S 38/42
		40		50 K 40/42	50 S 40/42
RfN 4001-55x100	55	35	48	55 K 35/48	55 S 35/48
		38		55 K 38/48	55 S 38/48
		40		55 K 40/48	55 S 40/48
		42		55 K 42/48	55 S 42/48
		45		55 K 45/48	55 S 45/48
RfN 4001-62x110	62	40	52	62 K 40/52	62 S 40/52
		45		62 K 45/52	62 S 45/52
		48		62 K 48/52	62 S 48/52
		50		62 K 50/52	62 S 50/52
RfN 4001-68x115	68	40	60	68 K 40/60	68 S 40/60
		45		68 K 45/60	68 S 45/60
		48		68 K 48/60	68 S 48/60
		50		68 K 50/60	68 S 50/60
		55		68 K 55/60	68 S 55/60
RfN 4001-75x138	75	45	65	75 K 45/65	75 S 45/65
		48		75 K 48/65	75 S 48/65
		50		75 K 50/65	75 S 50/65
		55		75 K 55/65	75 S 55/65
		60		75 K 60/65	75 S 60/65
RfN 4001-80x145	80	45	70	80 K 45/70	80 S 45/70
		50		80 K 50/70	80 S 50/70
		55		80 K 55/70	80 S 55/70
		60		80 K 60/70	80 S 60/70
		65		80 K 65/70	80 S 65/70
RfN 4001-90x155	90	50	75	90 K 50/75	90 S 50/75
		55		90 K 55/75	90 S 55/75
		60		90 K 60/75	90 S 60/75
		65		90 K 65/75	90 S 65/75
		70		90 K 70/75	90 S 70/75

Shrink Discs®

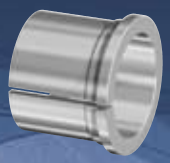

Clamp bushing

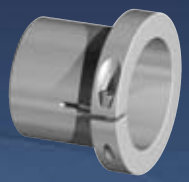

Support bushing

Smart-Lock-Set-Part numbers for metric size spare parts

Shrink Discs®	Ød 1	Ød 2	Ød 3	Clamp bushing	Support bushing
	mm	inch	mm	inch sizes	inch sizes
RfN 4001-44x80	44	1.0	36	44 K 1.0/36	44 S 1.0/36
		1.125		44 K 1.125/36	44 S 1.125/36
		1.1875		44 K 1.1875/36	44 S 1.1875/36
		1.25		44 K 1.25/36	44 S 1.25/36
RfN 4001-50x90	50	1.1875	42	50 K 1.875/42	50 S 1.875/42
		1.25		50 K 1.25/42	50 S 1.25/42
		1.375		50 K 1.375/42	50 S 1.375/42
		1.4375		50 K 1.4375/42	50 S 1.4375/42
RfN 4001-55x100	55	1.1875	48	55 K 1.875/48	55 S 1.875/48
		1.25		55 K 1.25/4	55 S 1.875/48
		1.375		55 K 1.375/48	55 S 1.875/48
		1.4375		55 K 1.4375/48	55 S 1.875/48
		1.5		55 K 1.5/48	55 S 1.5/48
RfN 4001-62x110	62	1.375	52	62 K 1.375/52	62 S 1.375/52
		1.4375		62 K 1.4375/52	62 S 1.4375/52
		1.5		62 K 1.5/52	62 S 1.5/52
		1.625		62 K 1.625/52	62 S 1.625/52
		1.75		62 K 1.75/52	62 S 1.75/52
		1.9375		62 K 1.9375/52	62 S 1.9375/52
RfN 4001-68x115	68	1.625	60	68 K 1.625/60	68 S 1.625/60
		1.75		68 K 1.75/60	68 S 1.75/60
		1.9375		68 K 1.9375/60	68 S 1.9375/60
		2.0		68 K 2.0/60	68 S 2.0/60
RfN 4001-75x138	75	1.9375	65	75 K 1.9375/65	75 S 1.9375/65
		2.0		75 K 2.0/65	75 S 2.0/65
RfN 4001-80x145	80	1.9375	70	80 K 1.9375/70	80 S 1.9375/70
		2.0		80 K 2.0/70	80 S 2.0/70
		2.375		80 K 2.375/70	80 S 2.375/70
		2.4375		80 K 2.4375/70	80 S 2.4375/70
RfN 4001-90x155	90	2.375	75	90 K 2.375/75	90 S 2.375/75
		2.4375		90 K 2.4375/75	90 S 2.4375/75
		2.75		90 K 2.75/75	90 S 2.75/75

WK 5071

WK 5091

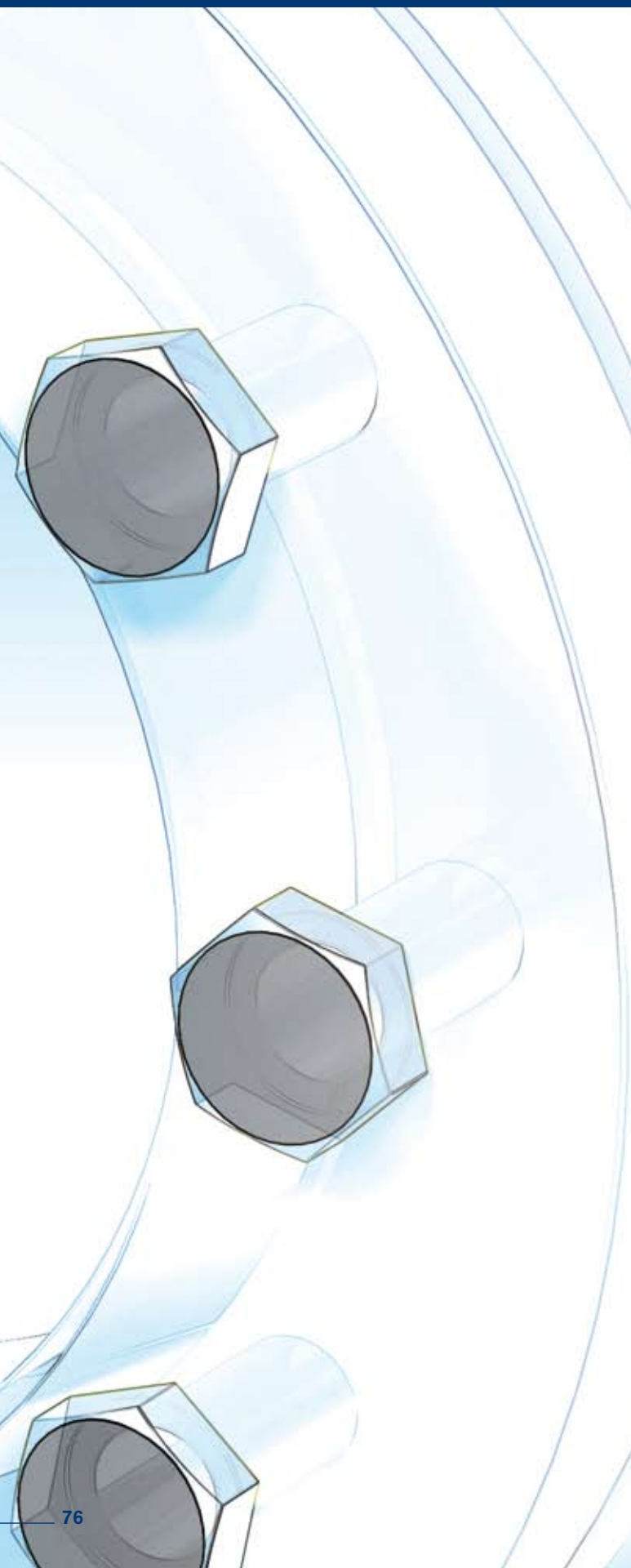

Characteristics

RINGFEDER rigid sleeve Couplings, type WK 5071 and WK 5091 have a proven track record in the industry. These Couplings are pre-engineered with RINGFEDER Shrink Discs® to connect two components rigidly and backlash free, when there is no misalignment between those components permitted.
Applications such has conveyor drives, ship drive shafts, line shafts in steel mills, etc., are ideal applications for the standard and heavy duty rigid sleeve Couplings.

Although our catalog shows some preselected standard length sleeve Couplings, our technical staff can custom make a design to fit your needs. We can provide special lengths, materials and versions for every need. Please contact the nearest RINGFEDER POWER TRANSMISSION OFFICE!

Explanations to tables

d, D, L, l, L_1, L_2, d_1 = Basic dimensions

d_W = solid shaft diameter (provided by the customer)

T = transmissible torque

F_{ax} = transmissible axial force

p = approx. surface pressure on the hub extension (diameter d)

T_A = required tightening torque per screw (Screws greased with molykote!)

n = quantity of screws

T_{max} = maximum theoretical transmissible torque

C_W = shaft clearance

LH = overall Coupling length

LD = overall Shrink Disc® width

σ_v = calculated combined stress in the hub extension (d/dw) under consideration of the tangential, radial and torsional stresses following the equation:

$$\sigma_V = \sqrt{{}^1/_2\,[(\sigma_X - \sigma_Y)^2 + (\sigma_Y - \sigma_Z)^2 + (\sigma_Z - \sigma_X)^2] + 3\tau^2}$$

Additional loads, e.g. tension, thrust or bending have to be taken into consideration accordingly.

Function values
The functional characteristics are valid with the screw tightening torque listed in the tables and the following assumed conditions:

The locking screws are lubricated using MoS2 (μ_{tot}= 0.1).
The tapered cones are lubricated using MoS_2 (μ = 0.05).
The contact surfaces (d_w) are in lightly oiled condition with coefficient of friction μ = 0.12.

The hub and shaft materials have a modulus of elasticity of 30 x 10^6 PSI. (Lower values result in increased values for T and Fax with reduced tangential stress.)

The maximum clearance is being fully utilized.
The shaft being used is solid, for hollow shaft applications the functional values will change.

In cases where the assumed conditions do not apply then contact our Technical Department where we will be happy to assist you with your application.

WK 5071

Standard Duty Coupling

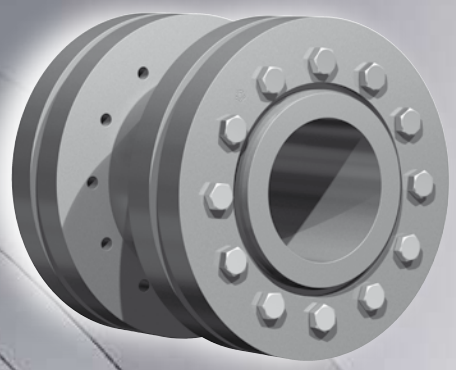

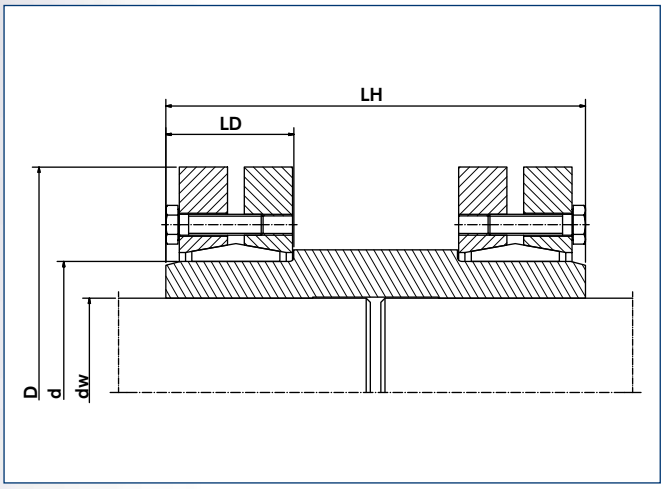

Explanations

TA	=	tightening torque per screw (dG)
T	=	transmissible torque
Fax	=	transmissible axial force

Further hints, explanations and fundamentals of calculation may be taken from our Shrink Disc® catalog.

Surface

For shaft diameter dw:

peak-to-valley height Ra ≤ 125 RMS.

Clearances considered for the calculation of the function values:

d_w above INCH	d_w up to INCH	ISO	clearance C_w INCH
0.236	0.394	H6/j6	0.0005
0.394	0.709		0.0007
0.709	1.181		0.0007
1.181	1.969	H6/h6	0.0013
1.969	3.150	H6/g6	0.0019
3.150	4.724	H7/g6	0.0027
4.724	7.087		0.0031
7.087	9.843		0.0035
9.843	12.402		0.0040
12.402	15.748		0.0044
15.748	19.685		0.0048

Size	Coupling dimensions							Transmissible torques or axial forces		
	d_W	C_W	d	D	L_H	L_D	d_G	T_A	T	F_{ax}
	Inch							lb-ft	lb-ft	lbs
20	0.591 0.669	+0 -0.0007	0.787	1.811	1.772	0.827	M 5	3	81 112	4271 5170
24	0.748 0.827		0.945	1.969	1.969	0.906	M 5	3	125 184	5620 6519
30	0.945 1.024		1.181	2.362	2.165	0.984	M 5	3	221 273	6519 7418
36	1.102 1.220		1.417	2.835	2.559	1.102	M 6	9	325 465	11240 13038
40	1.181 1.260	+0 -0.0013	1.575	2.953	2.559	1.142	M 6	9	446 487	13938 14162
44	1.260 1.417		1.732	3.150	2.756	1.181	M 6	9	524 634	15736 17310
50	1.496 1.654		1.969	3.543	3.150	1.260	M 6	9	693 1018	17759 20682
55	1.654 1.890		2.165	3.937	3.346	1.378	M 6	9	856 1387	17759 21806
62	1.890 2.047		2.441	4.331	3.543	1.378	M 6	9	1364 1770	22480 26302
68	1.969 2.362	+0 -0.0019	2.677	4.528	3.937	1.378	M 6	9	1475 2323	21806 26976
75	2.165 2.559		2.953	5.433	4.724	1.496	M 8	22	1844 2913	26751 34844
80	2.362 2.756		3.150	5.709	5.118	1.496	M 8	22	2360 3393	27875 35518
90	2.559 2.953		3.543	6.102	5.512	1.772	M 8	22	3503 5347	38216 47208
100	2.756 3.150		3.937	6.693	6.299	1.969	M 8	22	5089 6638	43836 53952
110	2.953 3.346		4.331	7.283	7.087	2.244	M 10	44	5310 7966	51479 58898
125	3.346 3.740	+0 -0.0027	4.921	8.465	7.874	2.402	M 10	44	8113 11063	66541 79130
140	3.740 4.134		5.512	9.055	8.268	2.717	M 12	74	11137 14825	82502 95540
155	4.134 4.528		6.102	10.433	9.055	2.874	M 12	74	16226 20652	100486 114423
165	4.528 4.921		6.496	11.417	9.449	3.189	M 16	184	22864 28765	133756 147244
175	4.921 5.315	+0 -0.0031	6.890	11.811	9.843	3.189	M 16	184	26552 33190	136004 151740
185	5.315 5.709		7.283	12.992	10.433	3.780	M 16	184	38353 45729	174894 193553
195	5.512 6.102		7.677	13.780	11.024	3.780	M 16	184	47941 60111	209738 240761
200	5.906 6.299		7.874	13.780	11.417	3.780	M 16	184	54579 63430	222552 242784

To continue see next page

WK 5071

Standard Duty Coupling

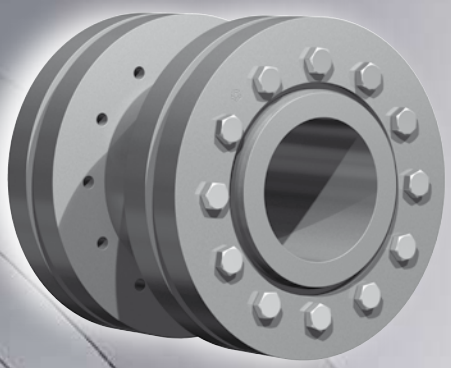

Characteristics

Three part Shrink Disc® heavy duty series – with additional guide mechanism for the inner ring. For the transmission of maximum torques.

Highest reliability – applicable for static, dynamic and impact loads.

Simplified manufacture – only plain shaft and bore diameters with easily achieved surface finishes and tolerances are required.

Fully replaceable – the RINGFEDER® Shrink Discs® work are self releasing.

Visual check of the tightening status – minimization of faults during assembly.

Easy mounting – RINGFEDER® Shrink Discs® use standard screws and tightened using standard tools. No additional machining or fitting work is required.

Short assembly times – cost savings particularly in the case of series production.

Low susceptibility to contamination – when the locking screws are tightened the contact (functional) surfaces are pressed firmly together and prevent contamination by dirt and moisture.

Easy adjustability – No stops, steps, key-ways, splines etc. are required therefore, hubs can be located and locked at any point or angle on the shaft.

Size	Coupling dimensions							Transmissible torques or axial forces		
	d_w	c_w	d	D	L_H	L_D	d_G	T_A	T	F_{ax}
	Inch	Inch	Inch	Inch	Inch	Inch	Inch	lb-ft	lb-ft	lbs
220	6.299 6.693	0.0031	8.661	14.567	12.205	4.488	M 16	184	70068 81132	267512 289992
240	6.693 7.480		9.449	15.945	13.780	4.803	M 20	361	88507 115059	329107 376540
260	7.480 8.268	0.0035	10.236	16.929	15.354	5.236	M 20	361	120960 151200	395648 451848
280	8.268 9.055		11.024	18.110	16.929	5.787	M 20	361	160051 199141	469832 528280
300	9.055 9.646		11.811	19.094	17.520	6.102	M 20	361	202829 232331	546489 592573
320	9.449 10.236		12.598	20.472	18.110	6.142	M 20	361	230119 275847	595046 651920
340	9.843 10.630	0.0040	13.386	22.441	18.898	6.772	M 20	361	287648 339278	701151 764320
350	10.630 11.220		13.780	22.835	19.291	6.890	M 20	361	326002 368780	736445 786800
360	11.024 11.614		14.173	23.228	19.685	6.890	M 20	361	341490 385006	744088 794893
380	11.417 12.205		14.961	25.394	20.866	7.205	M 24	620	418197 485314	878968 954950
390	11.811 12.598		15.354	25.984	21.260	7.205	M 24	620	460237 529568	935168 1008003
400	12.402 12.992	0.0044	15.748	26.772	21.260	7.205	M 24	620	494165 548745	957648 1011600
420	12.992 13.780		16.535	27.165	22.835	7.992	M 24	620	575297 663804	1090280 1173456
440	13.386 14.173		17.323	29.528	23.622	8.661	M 24	620	594473 676343	1065552 1144232
460	14.173 14.961		18.110	30.315	24.409	8.661	M 24	620	737560 840818	1274616 1360040
480	14.961 15.748		18.898	31.496	25.394	9.055	M 24	620	862945 966204	1382520 1472440
500	15.748 16.535	0.0048	19.685	33.465	26.378	9.055	M 27	922	967679 1073150	1474688 1557864

WK 5091

Heavy Duty Coupling

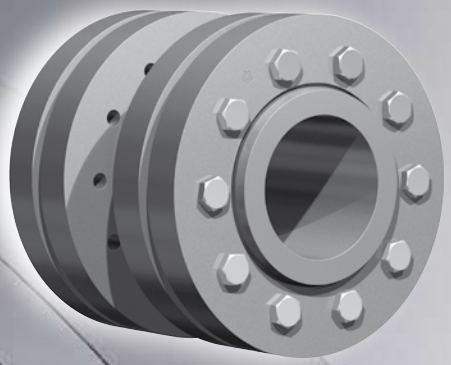

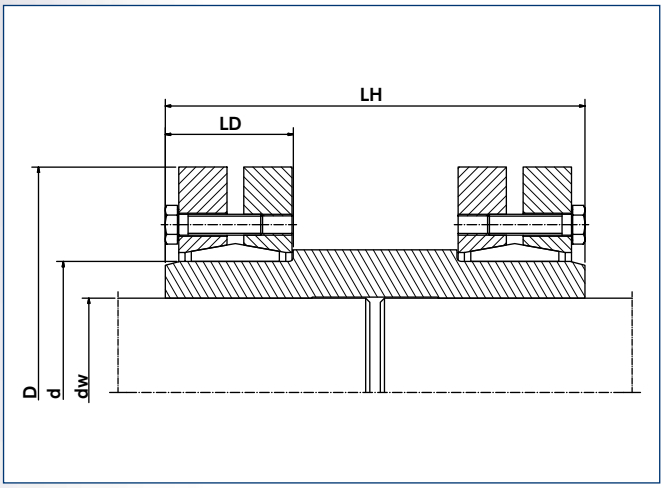

Heavy Duty Coupling

Size	Coupling dimensions							Transmissible torques or axial forces		
	d_W	C_W	d	D	L_H	L_D	d_G	T_A	T	F_{ax}
	Inch	Inch	Inch	Inch	Inch	Inch	Inch	lb-ft	lb-ft	lbs
125	3.346 3.740	+0 -0.0013	4.921	8.465	7.874	2.874	M 12	74	11063 14751	79804 9504994
140	3.740 4.134		5.512	9.055	8.268	3.228	M 12	74	15194 19545	97338 112400
155	4.134 4.528	+0 -0.0015	6.102	10.433	9.055	3.465	M 12	74	21094 26847	123640 141624
165	4.528 4.921		6.496	11.417	9.449	3.858	M 16	184	10326 37394	166352 183212
175	4.921 5.315		6.890	11.811	9.843	3.858	M 16	184	34665 42041	168600 188832
185	5.315 5.709		7.283	12.992	10.433	4.803	M 16	184	53104 63430	247280 269760
195	5.512 6.102		7.677	13.780	11.024	4.803	M 16	184	55317 70806	241660 277628
200	5.906 6.299		7.874	13.780	11.417	4.803	M 16	184	68224 78919	276504 302356
220	6.299 6.496 6.693	+0 -0.0017	8.661	14.567	12.205	5.669	M 16	184	93670 108053	357432 386656
240	6.693 7.480		9.449	15.945	13.780	6.181	M 20	361	114322 146037	409136 467584
260	7.480 8.268		10.236	16.929	15.354	6.811	M 20	361	157100 197666	508048 579984
280	8.268 9.055		11.024	18.110	16.929	7.283	M 20	361	210205 261834	615952 694632
300	9.055 9.646	+0 -0.0019	11.811	19.094	17.520	7.441	M 20	361	251508 290599	665408 722732

To continue see next page

WK 5091
Heavy Duty Coupling

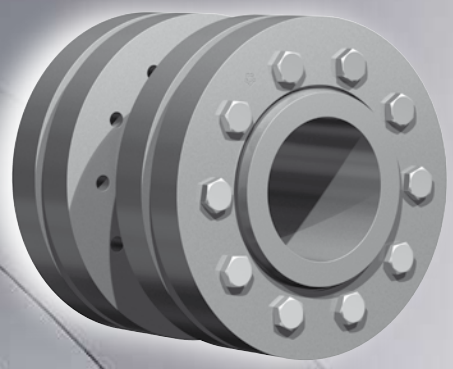

Characteristics

Three part Shrink Disc® heavy duty series – with additional guide mechanism for the inner ring. For the transmission of maximum torques.

Highest reliability – applicable for static, dynamic and impact loads.

Simplified manufacture – only plain shaft and bore diameters with easily achieved surface finishes and tolerances are required.

Fully replaceable – the RINGFEDER® Shrink Discs® work are self releasing.

Visual check of the tightening status – minimization of faults during assembly.

Easy mounting – RINGFEDER® Shrink Discs® use standard screws and tightened using standard tools. No additional machining or fitting work is required.

Short assembly times – cost savings particularly in the case of series production.

Low susceptibility to contamination – when the locking screws are tightened the contact (functional) surfaces are pressed firmly together and prevent contamination by dirt and moisture.

Easy adjustability – No stops, steps, key-ways, splines etc. are required therefore, hubs can be located and locked at any point or angle on the shaft.

Size	Coupling dimensions							Transmissible torques or axial forces		
	d_W	c_W	d	D	L_H	L_D	d_G	T_A	T	F_{ax}
	Inch	Inch	Inch	Inch	Inch	Inch	Inch	lb-ft	lb-ft	lbs
320	9.449 10.236	+0 -0.0019	12.598	20.472	18.110	7.756	M 20	361	278798 332640	708120 780056
340	9.843 10.630		13.386	22.441	18.898	8.465	M 24	620	361036 426310	878968 961020
350	10.630 11.220		13.780	22.835	19.291	8.465	M 24	620	410083 463925	926626 992492
360	11.024 11.614		14.173	23.228	19.685	8.622	M 24	620	451387 508179	982376 1049816
380	11.417 12.205	+0 -0.0021	14.961	25.394	20.866	8.622	M 24	620	455812 530306	959896 1044196
390	11.811 12.598		15.354	25.984	21.260	8.937	M 24	620	522192 600743	1059932 1144232
400	12.402 12.992		15.748	26.772	21.260	8.937	M 24	620	564233 623238	1091404 1152100
420	12.992 13.780		16.535	27.165	22.835	9.961	M 24	620	736822 840818	1361164 1464572
440	13.386 14.173		17.323	29.528	23.622	10.591	M 27	922	780338 888022	1400504 1503912
460	14.173 14.961		18.110	30.315	24.409	10.591	M 27	922	973579 1106340	1672512 1787160
480	14.961 15.748	+0 -0.0024	18.898	31.496	25.394	11.457	M 27	922	1132155 1268603	1816384 1933280
500	15.748 16.535		19.685	33.465	26.378	11.457	M 27	922	1290730 1430866	1967000 2079400

3-part design

1 front thrust ring

2 rear thrust ring

3 locking screw

4 inner ring

5 hub

6 shaft

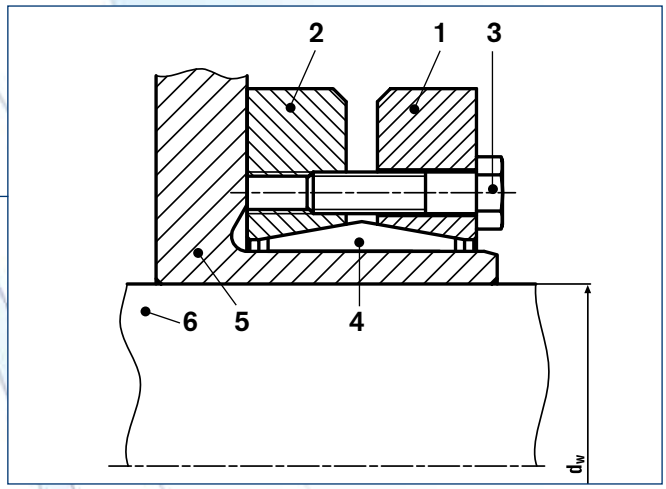

Shrink Discs® RfN 4051/4071/4061/4091/4073: designation of the parts

Installation and removal instructions

Shrink Discs® RfN 4051, 4061, 4071, 4091, 4073

Installation

1. Clean the area on the hub where the Shrink Disc® will be seated and oil to ease assembly, if necessary.

2. Removing spacers which may be present between the thrust rings for transport purposes.

3. Sliding the Shrink Disc® onto the hub.
   Attention: Do not start tightening the bolts before the shaft is in the bore of the hub, as this may cause permanent deformation.

4. Slide the hub onto the shaft and position as required. Use a thin oil to lightly lubricate the hub bore and shaft to facilitate assembly.
   Attention: Do not use lubricants containing MOS2.

5. Tighten 3 or 4 locking screws that are equally spaced around the diameter to establish a parallel or perpendicular position of Shrink Disc® collar(s) relative to hub web or shaft, respectively. This step properly seats the collar(s) on the taper of the inner ring.

6. Using a torque wrench, tighten all locking screws gradually and in sequence all the way around (not in a diametrically opposite sequence). Several passes may be required until all screws are torqued to the specified tightening torque (T_A).

7. Verify that the screws are completely tight by applying the specified tightening torque (T_A). The gap between the Shrink Disc® collars or between the Shrink Disc® collar and the hub should be even all the way around.

Removal

1. Loosen the bolts evenly and in sequence, again in several circular sequences, to avoid jamming of the discs on the inner ring. Never completely remove the bolts from their threaded holes, this creates a risk of accidents.

2. Slide the Shrink Disc® and its attached part from the shaft. Clean shaft and remove possible traces of rust from the shaft.

2-part design

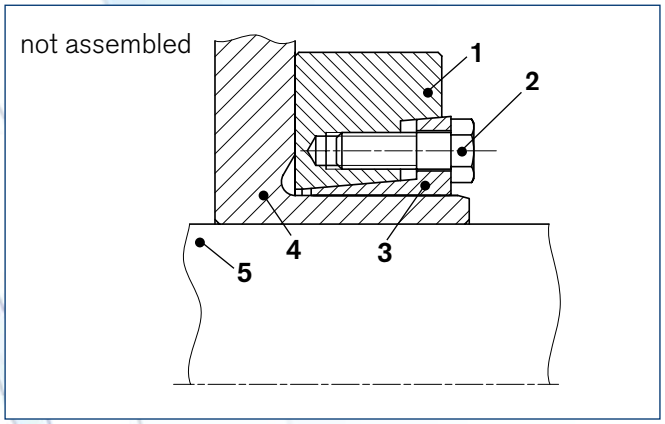

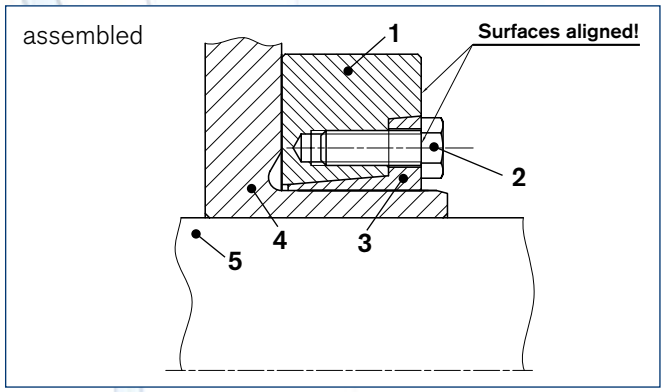

Shrink Discs® RfN 4171/4161/4181: designation of the parts

1	outer ring
2	locking screw
3	inner ring
4	hub
5	shaft

Installation and removal instructions

Shrink Discs® 4161, 4171, 4181

Installation

1. Clean the area on the hub where the Shrink Disc® will be seated and oil to ease assembly, if necessary.

2. Sliding the Shrink Disc® onto the hub.
   Attention: Do not start tightening before the shaft is in the bore of the hub; this may cause permanent deformation.

3. Slide the hub onto the shaft and position as required. Use a thin oil to lightly lubricate the hub bore and shaft to facilitate assembly.
   Attention: Do not use lubricants containing MOS2.

4. Tighten 3 or 4 locking screws that are equally spaced around the diameter to establish a parallel position of the Shrink Disc® inner relative to outer ring. This step properly seats the the taper of the inner ring.

5. Using a torque wrench, tighten all locking screws gradually and in sequence all the way around (not in a diametrically opposite sequence). Several passes may be required until all screws are torqued to the specified tightening torque (T_A).

6. Verify that the screws are completely tight by applying the specified tightening torque (T_A).

- Assembly, using a torque wrench:
  Check torquing of the bolts in sequence of their positions. Assembly is only complete once all the bolts have been torqued as specified.

- Assembly, without a torque wrench:
  Assembly is complete once the faces of the inner and outer rings are aligned flush.

Removal

1. Gradually release the locking bolts all the way around. Begin by releasing each bolt only about one quarter of a turn.

2. If the Shrink Disc® does not loosen, back all screws out until there is a gap between the head of the bolts and the Shrink Disc® face.

3. Completely remove a few screws and thread them into the adjacent removal threads roughly equally spaced around the diameter. Use these fasteners to push the inner ring away from the outer collar until the Shrink Disc® is loose on the shaft.

3-part design

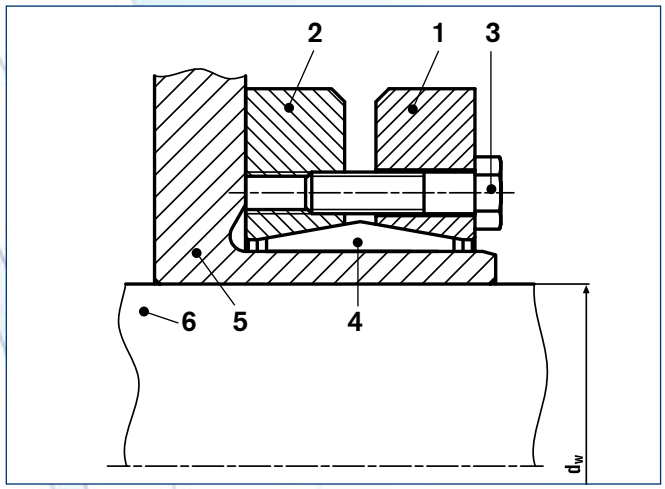

Shrink Discs® RfN 4071: designation of the parts

1	front thrust ring
2	rear thrust ring
3	locking screw
4	inner ring
5	hub
6	shaft

Installation and removal instructions

Shrink Discs® RfN 4071 Stainless

Installation

1. Clean the area on the shaft where the Shrink Disc® will be seated and oil lightly to ease assembly, if necessary. Attention: Do not use lubricants containing MOS2.

2. Fasten the attachment part to the Shrink Disc®. ATTENTION: Tighten the bolts lightly.

3. Slide the Shrink Disc® onto the shaft.

4. Tighten 3 or 4 locking screws that are equally spaced around the diameter to establish a parallel or perpendicular position of Shrink Disc® collar(s) relative to hub web or shaft, respectively. This step properly seats the collar(s) on the taper of the inner ring.

5. Using a torque wrench, tighten all locking screws gradually and in sequence all the way around (not in a diametrically opposite sequence). Several passes may be required until all screws are torqued to the specified tightening torque (T_A).

6. Verify that the screws are completely tight by applying the specified tightening torque (T_A). The gap between the Shrink Disc® collars or between the Shrink Disc® collar and the hub should be even all the way around.

Removal

1. Loosen the bolts evenly and in sequence, again in several circular sequences, to avoid jamming of the discs on the inner ring. Never completely remove the bolts from their threaded holes, this creates a risk of accidents.

2. Slide the Shrink Disc® and its attachment part from the shaft. First remove possible traces of rust from the shaft.

3. Release the attachment part from the Shrink Disc®.

ISO Tolerances

Shafts

Nominal diameter of shaft		d11		e8		e7		f8		f7		g6		h11		h9		h8		h7	
INCH																					
above	to	upper	lower	upper	lower	upper	lower	upper	lower	upper	lower	upper	lower	upper	lower	upper	lower	upper	lower	upper	lower
0.118	0.236	-0.0012	-0.0041	-0.0008	-0.0015	-0.0008	-0.0013	-0.0004	-0.0011	-0.0004	-0.0009	-0.0002	-0.0005	0	-0.0030	0	-0.0012	0	-0.0007	0	-0.0005
0.236	0.394	-0.0016	-0.0051	-0.0010	-0.0019	-0.0010	-0.0016	-0.0005	-0.0014	-0.0005	-0.0011	-0.0002	-0.0006	0	-0.0035	0	-0.0014	0	-0.0009	0	-0.0006
0.394	0.709	-0.0020	-0.0063	-0.0013	-0.0023	-0.0013	-0.0020	-0.0006	-0.0017	-0.0006	-0.0013	-0.0002	-0.0007	0	-0.0043	0	-0.0017	0	-0.0011	0	-0.0007
0.709	1.181	-0.0026	-0.0077	-0.0016	-0.0029	-0.0016	-0.0024	-0.0008	-0.0021	-0.0008	-0.0017	-0.0003	-0.0008	0	-0.0051	0	-0.0020	0	-0.0013	0	-0.0008
1.181	1.969	-0.0031	-0.0094	-0.0020	-0.0035	-0.0020	-0.0030	-0.0010	-0.0025	-0.0010	-0.0020	-0.0004	-0.0010	0	-0.0063	0	-0.0024	0	-0.0015	0	-0.0010
1.969	3.150	-0.0039	-0.0114	-0.0024	-0.0042	-0.0024	-0.0035	-0.0012	-0.0030	-0.0012	-0.0024	-0.0004	-0.0011	0	-0.0075	0	-0.0029	0	-0.0018	0	-0.0012
3.150	4.724	-0.0047	-0.0134	-0.0028	-0.0050	-0.0028	-0.0042	-0.0014	-0.0035	-0.0014	-0.0028	-0.0005	-0.0013	0	-0.0087	0	-0.0034	0	-0.0021	0	-0.0014
4.724	7.087	-0.0057	-0.0156	-0.0033	-0.0058	-0.0033	-0.0049	-0.0017	-0.0042	-0.0017	-0.0033	-0.0006	-0.0015	0	-0.0098	0	-0.0039	0	-0.0025	0	-0.0016
7.087	9.843	-0.0067	-0.0181	-0.0039	-0.0068	-0.0039	-0.0057	-0.0020	-0.0048	-0.0020	-0.0038	-0.0006	-0.0017	0	-0.0114	0	-0.0045	0	-0.0028	0	-0.0018
9.843	12.402	-0.0075	-0.0201	-0.0043	-0.0075	-0.0043	-0.0064	-0.0022	-0.0054	-0.0022	-0.0043	-0.0007	-0.0019	0	-0.0126	0	-0.0051	0	-0.0032	0	-0.0020
12.402	15.748	-0.0083	-0.0224	-0.0049	-0.0084	-0.0049	-0.0072	-0.0024	-0.0059	-0.0024	-0.0047	-0.0007	-0.0021	0	-0.0142	0	-0.0055	0	-0.0035	0	-0.0022
15.748	19.685	-0.0091	-0.0248	-0.0053	-0.0091	-0.0053	-0.0078	-0.0027	-0.0065	-0.0027	-0.0052	-0.0008	-0.0024	0	-0.0173	0	-0.0061	0	-0.0038	0	-0.0025

Nominal diameter of shaft		h6		h5		j6		k6		k5		m6		m5		n6		p6	
INCH																			
above	to	upper	lower	upper	lower	upper	lower	upper	lower	upper	lower	upper	lower	upper	lower	upper	lower	upper	lower
0.118	0.236	0	-0.0003	0	-0.0002	+0.0003	0.0000	-	–	–		+0.0005	+0.0002	+0.0004	+0.0002	+0.0006	+0.0003	+0.0008	+0.0005
0.236	0.394	0	-0.0004	0	-0.0002	+0.0003	-0.0001	+0.0004	+0.0000	+0.0003	+0.0000	+0.0006	+0.0002	+0.0005	+0.0002	+0.0007	+0.0004	+0.0009	+0.0006
0.394	0.709	0	-0.0004	0	-0.0003	+0.0003	-0.0001	+0.0005	+0.0000	+0.0004	+0.0000	+0.0007	+0.0003	+0.0006	+0.0003	+0.0009	+0.0005	+0.0011	+0.0007
0.709	1.181	0	-0.0005	0	-0.0004	+0.0004	-0.0002	+0.0006	+0.0001	+0.0004	+0.0001	+0.0008	+0.0003	+0.0007	+0.0003	+0.0011	+0.0006	+0.0014	+0.0010
1.181	1.969	0	-0.0006	0	-0.0004	+0.0004	-0.0002	+0.0007	+0.0001	+0.0005	+0.0001	+0.0010	+0.0004	+0.0008	+0.0004	+0.0013	+0.0007	+0.0017	+0.0010
1.969	3.150	0	-0.0007	0	-0.0005	+0.0005	-0.0003	+0.0008	+0.0001	+0.0006	+0.0001	+0.0012	+0.0004	+0.0009	+0.0004	+0.0015	+0.0008	+0.0020	+0.0013
3.150	4.724	0	-0.0009	0	-0.0006	+0.0005	-0.0004	+0.0010	+0.0001	+0.0007	+0.0001	+0.0014	+0.0005	+0.0011	+0.0005	+0.0018	+0.0009	+0.0023	+0.0015
4.724	7.087	0	-0.0010	0	-0.0007	+0.0006	-0.0004	+0.0011	+0.0001	+0.0008	+0.0001	+0.0016	+0.0006	+0.0013	+0.0006	+0.0020	+0.0011	+0.0027	+0.0017
7.087	9.843	0	-0.0011	0	-0.0008	+0.0006	-0.0005	+0.0013	+0.0002	+0.0009	+0.0002	+0.0018	+0.0007	+0.0015	+0.0007	+0.0024	+0.0012	+0.0031	+0.0020
9.843	12.402	0	-0.0013	0	-0.0009	+0.0006	-0.0006	+0.0014	+0.0002	+0.0011	+0.0002	+0.0021	+0.0008	+0.0017	+0.0008	+0.0026	+0.0013	+0.0035	+0.0022
12.402	15.748	0	-0.0014	0	-0.0010	+0.0007	-0.0007	+0.0016	+0.0002	+0.0011	+0.0002	+0.0022	+0.0008	+0.0018	+0.0008	+0.0029	+0.0015	+0.0039	+0.0024
15.748	19.685	0	-0.0016	0	-0.0011	+0.0008	-0.0008	+0.0018	+0.0002	+0.0013	+0.0002	+0.0025	+0.0009	+0.0020	+0.0009	+0.0031	+0.0016	+0.0043	+0.0027

Bores

Nominal diameter of bore		d11		e8		e7		f8		f7		g6		h11		h9		h8		h7	
INCH																					
above	to	upper	lower	upper	lower	upper	lower	upper	lower	upper	lower	upper	lower	upper	lower	upper	lower	upper	lower	upper	lower
0.118	0.236	+0.0041	+0.0012	+0.0015	+0.0008	+0.0013	+0.0008	+0.0011	+0.0004	+0.0009	+0.0004	+0.0006	+0.0002	+0.0030	0	+0.0012	0	+0.0007	0	+0.0005	0
0.236	0.394	+0.0051	+0.0016	+0.0019	+0.0010	+0.0016	+0.0010	+0.0014	+0.0004	+0.0011	+0.0005	+0.0008	+0.0002	+0.0035	0	+0.0014	0	+0.0009	0	+0.0006	0
0.394	0.709	+0.0063	+0.0020	+0.0023	+0.0013	+0.0020	+0.0013	+0.0017	+0.0005	+0.0013	+0.0006	+0.0009	+0.0002	+0.0043	0	+0.0017	0	+0.0011	0	+0.0007	0
0.709	1.181	+0.0077	+0.0026	+0.0029	+0.0016	+0.0024	+0.0016	+0.0021	+0.0006	+0.0016	+0.0008	+0.0011	+0.0003	+0.0051	0	+0.0020	0	+0.0013	0	+0.0008	0
1.181	1.969	+0.0094	+0.0031	+0.0035	+0.0020	+0.0030	+0.0020	+0.0025	+0.0007	+0.0020	+0.0010	+0.0013	+0.0004	+0.0063	0	+0.0024	0	+0.0015	0	+0.0010	0
1.969	3.150	+0.0114	+0.0039	+0.0042	+0.0024	+0.0035	+0.0024	+0.0030	+0.0008	+0.0024	+0.0012	+0.0016	+0.0004	+0.0075	0	+0.0029	0	+0.0018	0	+0.0012	0
3.150	4.724	+0.0134	+0.0047	+0.0050	+0.0028	+0.0042	+0.0028	+0.0035	+0.0010	+0.0028	+0.0014	+0.0019	+0.0005	+0.0087	0	+0.0034	0	+0.0021	0	+0.0014	0
4.724	7.087	+0.0156	+0.0057	+0.0058	+0.0033	+0.0049	+0.0033	+0.0042	+0.0011	+0.0033	+0.0017	+0.0021	+0.0006	+0.0098	0	+0.0039	0	+0.0025	0	+0.0016	0
7.087	9.843	+0.0181	+0.0067	+0.0068	+0.0039	+0.0057	+0.0039	+0.0048	+0.0013	+0.0038	+0.0020	+0.0024	+0.0006	+0.0114	0	+0.0045	0	+0.0028	0	+0.0018	0
9.843	12.402	+0.0201	+0.0075	+0.0075	+0.0043	+0.0064	+0.0043	+0.0054	+0.0014	+0.0043	+0.0022	+0.0027	+0.0007	+0.0126	0	+0.0051	0	+0.0032	0	+0.0020	0
12.402	15.748	+0.0224	+0.0083	+0.0084	+0.0049	+0.0072	+0.0049	+0.0059	+0.0016	+0.0047	+0.0024	+0.0030	+0.0007	+0.0142	0	+0.0055	0	+0.0035	0	+0.0022	0
15.748	19.685	+0.0248	+0.0091	+0.0091	+0.0053	+0.0078	+0.0053	+0.0065	+0.0018	+0.0052	+0.0027	+0.0033	+0.0008	+0.0157	0	+0.0061	0	+0.0038	0	+0.0025	0

Nominal diameter of shaft		h6		J7		J6		K7		K6		M7		M6		N7		N6		P7	
INCH																					
above	to	upper	lower	upper	lower	upper	lower	upper	lower	upper	lower	upper	lower	upper	lower	upper	lower	upper	lower	upper	lower
0.118	0.236	+0.0003	0	+0.0002	-0.0003	+0.0002	-0.0002	-	-	-	-	0	-0.0005	0.0000	-0.0004	-0.0002	-0.0006	-0.0002	-0.0005	-0.0003	-0.0008
0.236	0.394	+0.0004	0	+0.0003	+0.0003	+0.0002	-0.0002	2E-04	-0.0004	0.0001	-0.0003	0	-0.0006	-0.0001	-0.0005	-0.0002	-0.0007	-0.0003	-0.0006	-0.0004	-0.0009
0.394	0.709	+0.0004	0	+0.0004	-0.0003	+0.0002	-0.0002	2E-04	-0.0005	0.0001	-0.0004	0	-0.0007	-0.0002	-0.0006	-0.0002	-0.0009	-0.0004	-0.0008	-0.0004	-0.0011
0.709	1.181	+0.0005	0	+0.0005	-0.0004	+0.0003	-0.0002	2E-04	-0.0006	0.0001	-0.0004	0	-0.0008	-0.0002	-0.0007	-0.0003	-0.0011	-0.0004	-0.0009	-0.0006	-0.0014
1.181	1.969	+0.0006	0	+0.0006	-0.0004	+0.0004	-0.0002	3E-04	-0.0007	0.0001	-0.0005	0	-0.0010	-0.0002	-0.0008	-0.0003	-0.0013	-0.0005	-0.0011	-0.0007	-0.0017
1.969	3.150	+0.0007	0	+0.0007	-0.0005	+0.0005	-0.0002	4E-04	-0.0008	0.0002	-0.0006	0	-0.0012	-0.0002	-0.0009	-0.0004	-0.0015	-0.0006	-0.0013	-0.0008	-0.0020
3.150	4.724	+0.0009	0	+0.0009	-0.0005	+0.0006	-0.0002	4E-04	-0.0010	0.0002	-0.0007	0	-0.0014	-0.0002	-0.0011	-0.0004	-0.0018	-0.0006	-0.0015	-0.0009	-0.0023
4.724	7.087	+0.0010	0	+0.001	-0.0006	+0.0007	-0.0003	5E-04	-0.0011	0.0002	-0.0008	0	-0.0016	-0.0003	-0.0013	-0.0005	-0.0020	-0.0008	-0.0018	-0.0011	-0.0027
7.087	9.843	+0.0011	0	+0.0012	-0.0006	+0.0009	-0.0003	5E-04	-0.0013	0.0002	-0.0009	0	-0.0018	-0.0003	-0.0015	-0.0006	-0.0024	-0.0009	-0.0020	-0.0013	-0.0031
9.843	12.402	+0.0013	0	+0.0014	-0.0006	+0.001	-0.0003	6E-04	-0.0014	0.0002	-0.0011	0	-0.0020	-0.0004	-0.0016	-0.0006	-0.0026	-0.0010	-0.0022	-0.0014	-0.0035
12.402	15.748	+0.0014	0	+0.0015	-0.0007	+0.0011	-0.0003	7E-04	-0.0016	0.0003	-0.0011	0	-0.0022	-0.0004	-0.0018	-0.0006	-0.0029	-0.0010	-0.0024	-0.0016	-0.0039
15.748	19.685	+0.0016	0	+0.0017	-0.0008	+0.0013	-0.0003	7E-04	-0.0018	0.0003	-0.0013	0	-0.0025	-0.0004	-0.0020	-0.0007	-0.0031	-0.0011	-0.0026	-0.0018	-0.0043

Fax Inquiry

To get a design proposal for RINGFEDER® shaft-hub-connections

RINGFEDER POWER TRANSMISSION Corp., P.O. Box 691 Westwood · NJ 07675

Fax +1 201 664 6053

From

Company

attn. Dept.

Address

Phone Fax

E-Mail

Please have someone contact me at the following number or email address:

To make it easier for our technical staff and to avoid errors or mistakes your inquiry should include the following information:

Information for technical service

Expected maximum loads:

Max. torque	T	max.	=		lb-ft
Max. bending moment	M	max.	=		lb-ft
Max. axial load	F	max.	=		lbs
Max. radial load	F_r	max.	=		lbs

Dimensions, materials:

Shaft diameter	d_W	=		inches
In case of hollow shaft, internal diameter	d_B	=		inches
Speed	n	=		rpm
Hub outside diameter	D_N	=		lbs
Hub width	B	=		inches
Hub material yield strength	$R_{p0.2N}$	=		psi
Shaft material yield strength	$R_{p0.2W}$	=		psi
Ambient temperature	Temp.	=		degree F

Additional information:

Please send a drawing or sketch together with your inquiry!

RINGFEDER PT CORPORATION · 165 Carver Avenue, P.O. Box 691 Westwood, NJ 07675, USA
Toll Free: +1 888 746-4333 · Phone: +1 201 666 3320 · Fax: +1 201 664 6053
E-mail: sales.usa@ringfeder.com · E-mail: sales.usa@gerwah.com

Delivery Program

RINGFEDER

Locking Devices

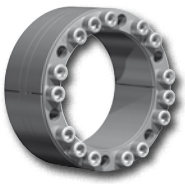
Locking Assemblies

Locking Elements

Shrink Discs®

Smart-Lock

Damping Technology

Friction Springs

DEFORM plus®
DEFORM plus® R

Fluid Elastomeric Damper

Special Solutions

Shaft Couplings

Locking Assemblies

Flange Couplings

GERWAH®

Couplings

Magnetic Couplings

Metal Bellows Couplings

Servo-Insert Couplings

RING-flex® – torsionally rigid Disc Couplings

Safety Couplings

Line Shafts

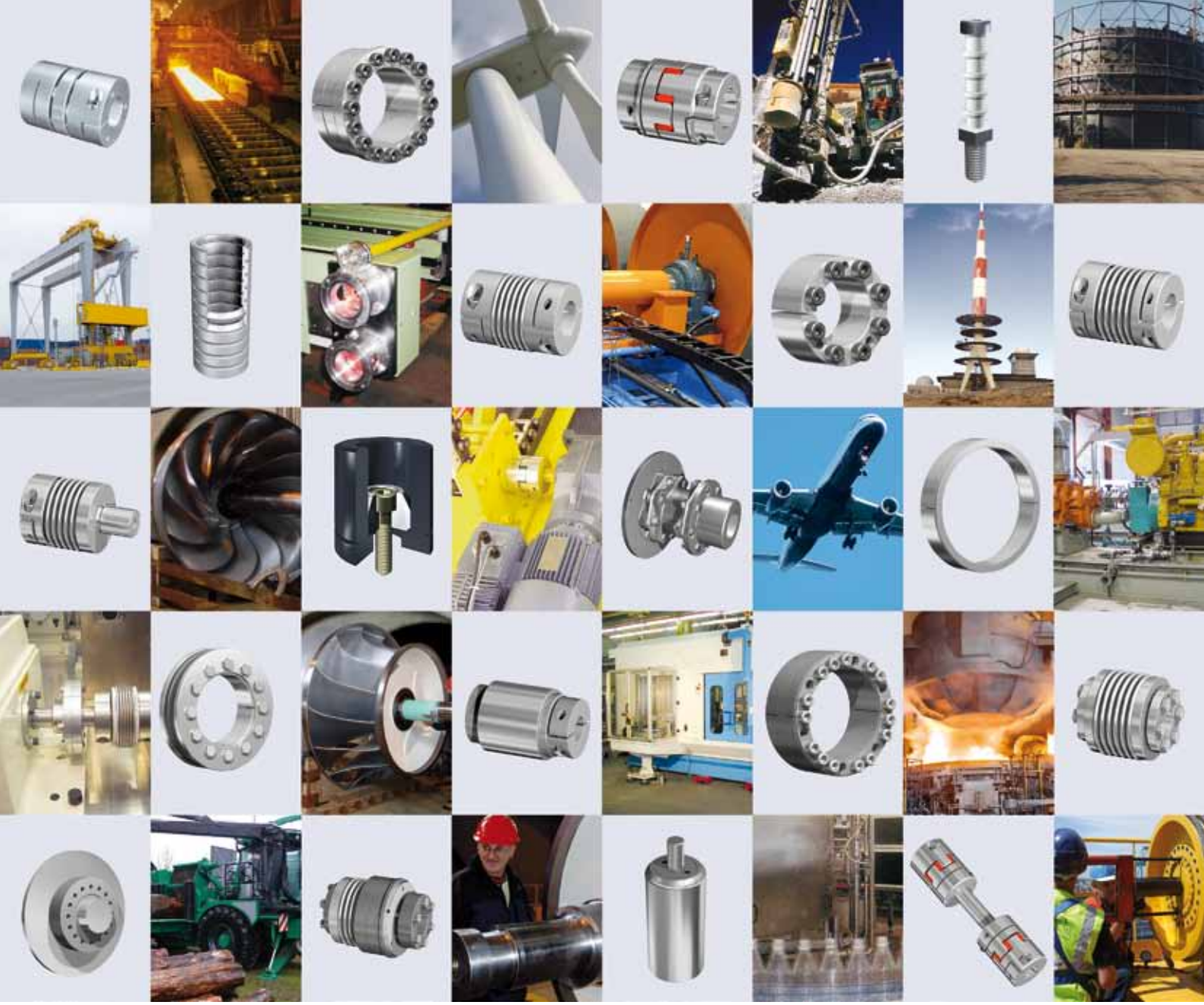

RINGFEDER POWER TRANSMISSION GMBH

- Oberschlesienstr. 15, D-47807 Krefeld, Germany
- Lützeltaler Str. 5a, D-63868 Großwallstadt, Germany · Phone: +49 (0) 6022 2204-0 · Fax: +49 (0) 6022 2204-11
  E-mail: sales.international@ringfeder.com · E-mail: sales.international@gerwah.com

RINGFEDER POWER TRANSMISSION USA CORPORATION

165 Carver Avenue, P.O. Box 691 Westwood, NJ 07675, USA · Toll Free: +1 888 746-4333 · Phone: +1 201 666 3320
Fax: +1 201 664 6053 · E-mail: sales.usa@ringfeder.com · E-mail: sales.usa@gerwah.com

RINGFEDER POWER TRANSMISSION INDIA PRIVATE LIMITED

Plot No. 4, Door No. 220, Mount - Poonamallee Road, Kattupakkam, Chennai – 600 056, India
Phone: +91 (0) 44-2679-1411 · Fax: +91 (0) 44-2679-1422 · E-mail: sales.india@ringfeder.com · E-mail: sales.india@gerwah.com

KUNSHAN RINGFEDER POWER TRANSMISSION COMPANY LIMITED

German Industry Park, No. 508 Hengguanjing Road, Zhangpu Town, Kunshan City, P.R. China (Post: 215321)
Phone: +86 (0) 512-5745-3960 · Fax: +86 (0) 512-5745-3961 · E-mail sales.china@ringfeder.com